INSTALLATION QUALIFICATION REPORT
For the Flow Splitter Tester (TE82950)

PREPARED BY

Name	Role	Signature	Date
Emma Pierce	Test Validation Engineer		12 Jan 2018

REVIEWED BY

Name	Role	Signature	Date
Mike Cotter	Principal Test Engineer		12 JAN 2018

APPROVED BY

Name	Role	Signature	Date
Andre Kopoyan	Senior Operations Quality Engineer		15 Jan 2018

The "Prepared By" signature denotes that this document accurately describes the qualification activities.

The "Reviewed By" signature[s] denotes agreement with the description of the qualification activities.

The "Approved By" signature denotes that this document has been reviewed and approved for overall quality and completeness.

REVISION HISTORY

Version	Author	Summary of change
00	Emma Pierce	First document for approval

1.0 Purpose

The Flow Splitter Tester (TE82950) is located in the NPI laboratory in Milford, MA. The station is used to test flow splitter assemblies of the following part numbers: 279001309, 279001310, 279001311, 279001312, 279001313, and 279001314. In the final test, the UUT is connected to the test station and the back pressure at maximum flow, decay, and delay time at maximum flow are tested.

The tester is equipped with an LED power switch, a configuration switch, two injection sites, and the various tubing connections required. The test station is equipped with two Waters 2487 UV / Visible Detectors, a Waters BGM Pump, a BBC SE120 Analog Chart Recorder, and a control module. The station is also connected to shop air and the nitrogen supply and is equipped with the necessary solvents, waste tanks, and tubing connections. This tester uses commercial computer software to control and monitor the test as well as automatically generate and print out a test record. This tester does not have any associated custom software or instrument firmware.

This Installation Qualification is being performed as required by the Quality Plan #2017-002.

2.0 Scope of Report

This Installation Qualification Report details the qualification activities undertaken for the Flow Splitter Tester (TE82950) based on the requirements of the Installation Qualification Procedure 730004135, Ver. 00.

This Installation Qualification Report defines the documents used to qualify the Flow Splitter Tester (TE82950).

3.0 Summary of Results - Statement of Fitness for Intended Use

The Flow Splitter Tester was tested in accordance with the Installation Qualification Procedure 730004135, Ver. 00. All Test Scripts were performed and all objective evidence requirements have been met.

Waters now has the necessary documentation in place to ensure that the Flow Splitter Tester complies with Waters' requirements, the latest relevant quality system regulations, and cGMP practices.

Following the approval of this Qualification Report, the Flow Splitter Tester (TE82950) can be considered fully qualified and fit for intended use.

4.0 Glossary

The following definitions are used in this document:

Term	Explanation
§	Section
BBC	Chart Recorder Manufacturer
BGM	Binary Gradient Module
CAL/PM	Calibration/Preventive Maintenance
cGMP	Current Good Manufacturing Practice
Hz	Hertz
ID	Identification
IQ	Installation Qualification
IQR	Installation Qualification Report
LED	Light Emitting Diode
mL/min	Milliliters per Minute
N/A	Not Applicable
NPI	New Product Introduction
P/N	Part Number

Term	Explanation
S/N	Serial Number
SAP	Enterprise Resource Planning Software
TSP	Test Specification and Procedure
UUT	Unit Under Test
UV	Ultraviolet
VAC	Volts Alternating Current

5.0 Training

The operator of the Flow Splitter Tester (TE82950) was trained according to the Flow Splitters TSP 735003156, Ver. 01. The executor of this qualification was trained according to the Installation Qualification Procedure 730004135, Ver. 00. Both training records are provided as Attachments 7.1 and 7.2, respectively.

6.0 Qualification Results

6.1 Test Script IQ-01: Associated Documentation Verification was performed according to Installation Qualification Procedure 730004135, Ver. 00. The completed Test Script Data Sheet is provided as Attachment 7.3.

6.1.1 The Flow Splitters TSP 735003156, Ver. 01 was confirmed to be in SAP with a status of Release General, as evidenced below:

Document List After Selection 2 Hits Waters

Choose Save Thumbnails (Images)

RevLev	Type	Document	Vs	Part	Description	Status text	Current Ver
A	TSP	735003156	00	000	TEST SPEC AND PROCEDURE, FLOW SPLITTERS	RELEASE GENERAL	
B	TSP	735003156	01	000	TEST SPEC AND PROCEDURE, FLOW SPLITTERS	RELEASE GENERAL	

6.1.2 The TE82950 Preventative Maintenance Procedure 735003478, Ver. 00 was confirmed to be in SAP with a status of Release General, as evidenced below:

Document List After Selection 1 Hits Waters

Choose Save Thumbnails (Images)

RevLev	Type	Document	Vs	Part	Description	Status text	Current Ver
A	CAL	735003478	00	000	PM Procedure, TE82950	RELEASE GENERAL	

6.2 Test Script IQ-02: Site Verification was performed according to Installation Qualification Procedure 730004135, Ver. 00. The completed Test Script Data Sheet is provided as Attachment 7.4.

6.2.1 The ambient temperature and humidity were measured using an Extech 445703 Hygro-thermometer (ID #94408) and were determined to be within specification as defined by §7 of the Functional Specification for New AutoPurification Flow Splitters, which can found in the Project Documentation Archives on a secured company server. This document is in the process of being uploaded to SAP and a complete copy has been provided as Attachment 7.5. The calibration record of the hygro-thermometer is provided as Attachment 7.6.

6.2.2 The electrical supply was measured using a Fluke 189 Multimeter (ID #98209), and was determined to be within specification as defined by the System Fluidics Organizer Operator Guide 71500135002, Ver. 00. The calibration record is provided as Attachment 7.7.

6.2.3 The Test Station was confirmed to have more than the seven (7) dedicated electrical outlets required.

6.2.4 The space and test bench of the Flow Splitter Tester (TE82950) were confirmed to have adequate space for testing and service. The bench was confirmed to be large and strong enough to support all test equipment. A picture of the Test Station work area is provided as Attachment 7.8.

6.3 Test Script IQ-03: Instrumentation Calibration Verification was performed according to Installation Qualification Procedure 730004135, Ver. 00. The completed script is provided as Attachment 7.9.

6.3.1 The Flow Splitter Tester (TE82950) was confirmed to be in the Calibration Manager Database with a twelve (12) month maintenance cycle. A screen capture from the database is provided as Attachment 7.10.

6.3.2 The Test Station was confirmed to have had preventative maintenance within this time frame. The most recent Preventative Maintenance Record is provided as Attachment 7.11.

6.3.3 The Waters 2487 UV / Visible Detector (ID: 82291) was confirmed to be in the Calibration Manager Database with a twelve (12) month maintenance cycle. A screen capture from the database is provided as Attachment 7.12.

6.3.4 The detector was confirmed to have had preventative maintenance within this time frame. The most recent Preventative Maintenance Record is provided as Attachment 7.13.

6.3.5 The Waters 2487 UV / Visible Detector (ID: 83011) was confirmed to be in the Calibration Manager Database with a twelve (12) month maintenance cycle. A screen capture from the database is provided as Attachment 7.14.

6.3.6 The detector was confirmed to have had preventative maintenance within this time frame. The most recent Preventative Maintenance Record is provided as Attachment 7.15.

6.3.7 The Waters BGM Pump (ID: 83014) was confirmed to be in the Calibration Manager Database with a twelve (12) month maintenance cycle. A screen capture from the database is provided as Attachment 7.16.

6.3.8 The pump was confirmed to have had preventative maintenance within this time frame. The most recent Preventative Maintenance Record is provided as Attachment 7.17.

6.3.9 The BBC SE120 Analog Chart Recorder (ID: TR280) has a calibration cycle of twelve (12) months and was confirmed to have been calibrated within this time frame. The most recent calibration record is provided as Attachment 7.18.

6.4 Test Script IQ-04: Software and Instrument Firmware Version was not performed as part of this qualification.

6.4.1 There is no custom test software used with this tester.

6.4.2 This tester does not download instrument firmware.

6.5 Test Script IQ-05: General Safety and Alarms was performed according to Installation Qualification Procedure 730004135, Ver. 00. The completed Test Script Data Sheet is provided as Attachment 7.19.

6.5.1 It was confirmed that there were no mechanical safety pinch points or sharp edges.

6.5.2 An electrical safety test was performed using a Quadtech Guardian 6000 Electro Safety Analyzer (ID #90261). The Flow Splitter Tester, both Waters 2487 UV / Visible Detectors, and the Waters BGM Pump were confirmed to pass an Electrical Safety Hi-Pot/Ground Continuity test. The calibration record is provided as Attachment 7.20. The BBC SE120 Analog Chart Recorder is commercial equipment and is therefore exempt from electrical safety testing according to the General Electric Safety Test Procedure WAT04658, Ver. 06.

6.5.3 It was confirmed that the glass bottle and the waste tanks in use at the test station were secured.

6.6 Test Script IQ-06: Functional Verification was performed according to Installation Qualification Procedure 730004135, Ver. 00. The completed Test Script Data Sheets are provided as Attachments 7.21 and 7.23.

6.6.1 The 15:1, 0.2 – 5 mL/min Fixed Splitter Assembly (P/N: 279001309) and the 5000:1, 30 – 100 mL/min Fixed Splitter Assembly (P/N: 279001313) were chosen as the UUTs for this Installation Qualification in order to test the system at both low and high flow rates, respectively.

6.6.2 One (1) UUT (P/N: 279001309, S/N: 0507014) was tested using the Flow Splitter Tester (TE82950) with all tests passing. The passing test record is provided as Attachment 7.22

6.6.3 One (1) UUT (P/N: 279001313, S/N: 0413369) was tested using the Flow Splitter Tester (TE82950) with all tests passing. The passing test record is provided as Attachment 7.24.

6.7 This table provides a summary of each test script as performed according to 730004135, Ver. 00 along with the attachment location of all objective evidence. The table also indicates any deviation taken from the scripts during qualification.

Script or Section	Pass/Fail	Objective Evidence	Deviations
IQ-01	Pass	Attachment 7.3	None
IQ-02	Pass	Attachments 7.4 through 7.8	None
IQ-03	Pass	Attachments 7.9 through 7.18	None
IQ-05	Pass	Attachments 7.19 and 7.20	None
IQ-06	Pass	Attachments 7.21 through 7.24	None

7.0 Attachments

7.1 Completed Operator Training Record 735003156, Ver. 01

7.2 Completed Executor Training Record 730004135, Ver. 00

7.3 Completed Test Script IQ-01: Associated Document Verification

7.4 Completed Test Script IQ-02: Site Verification

7.5 Objective Evidence IQ-02: Functional Specification for New AutoPurification Flow Splitters

7.6 Objective Evidence IQ-02: Extech 445703 Hygro-thermometer (ID #94408) Calibration Record

7.7 Objective Evidence IQ-02: Fluke 189 Multimeter (ID #98209) Calibration Record

7.8 Objective Evidence IQ-02: Picture of Test Station Work Area

7.9 Completed Test Script IQ-03: Instrument Calibration Verification

7.10 Objective Evidence IQ-03: Screen Capture of Flow Splitter Tester (TE82950) in Calibration Master Database

7.11 Objective Evidence IQ-03: Flow Splitter Tester (TE82950) Calibration Record

7.12 Objective Evidence IQ-03: Screen Capture of Waters 2487 UV / Visible Detector (ID: 82291) in Calibration Master Database

7.13 Objective Evidence IQ-03: Waters 2487 UV / Visible Detector (ID: 82291) Calibration Record

7.14 Objective Evidence IQ-03: Screen Capture of Waters 2487 UV / Visible Detector (ID: 83011) in Calibration Master Database

7.15 Objective Evidence IQ-03: Waters 2487 UV / Visible Detector (ID: 83011) Calibration Record

7.16 Objective Evidence IQ-03: Screen Capture of Waters BGM Pump (ID: 83014) in Calibration Master Database

7.17 Objective Evidence IQ-03: Waters BGM Pump (ID: 83014) Calibration Record

7.18 Objective Evidence IQ-03: BBC SE120 Analog Chart Recorder (ID: TR280) Calibration Record

7.19 Completed Test Script IQ-05: General Safety and Alarms

7.20 Objective Evidence IQ-05: Quadtech Guardian 6000 Electro Safety Analyzer (ID #90261) Calibration Record

7.21 Completed Test Script IQ-06: Functional Verification of UUT Part #279001309 (S/N: 0507014)

7.22 Objective Evidence IQ-06: Passing Test Record for UUT Part # 279001309 (S/N: 0507014)

7.23 Completed Test Script IQ-06: Functional Verification of UUT Part #279001313 (S/N: 0413369)

7.24 Objective Evidence IQ-06: Passing Test Record for UUT Part # 279001313 (S/N: 0413369)

8.0 Deviation from Test Equipment Qualification

There were no deviations generated during the execution of the Installation Qualification Procedure 730004135, Ver. 00.

9.0 References

The current approved versions of the following documents are referenced within this report:

Document Number	Document Title
730004135, Ver. 00	Installation Qualification Procedure
735003156, Ver. 01	Flow Splitters TSP
735003478, Ver. 00	TE82950 Preventative Maintenance Procedure
* Project Documentation Archives -> Next Generation Purification System -> Doc. 55	Functional Specification for New AutoPurification Flow Splitters
71500135002, Ver. 00	System Fluidics Organizer Operator Guide
WAT046538, Ver. 09	Generic Electrical Safety Test Procedure
2017-002	Legacy Products Relocation Quality Plan

* This document has been uploaded to SAP as 721015221, ver. 00

EEP 15 Jan 2018
MWC 16 JAN 2018
AK 16 Jan 2018

Appendix A: TRAINING RECORD

Document No. 735003156 **Procedure Title** Flow Splitters TSP **Version** 01

Training by: SELF (Printed name) N/A (Signature) N/A (Date)

By signing you acknowledge that you have reviewed, understand, and agree to comply with the policies and practices of the procedure defined above.

Printed Name	Signature	Initials	Date
HENRY JUREWICH		HJ	06DEC2017
Bonnie Fleury		BF	06 Dec 2017

N/A Eep 08 Jan 2018

Copy this Training Record Template as needed

Revision 00
Document No.: TE829500-10R
Attachment: 7.1 Page: 1 of 1

Training Requirements Status for: 90034916 - Pierce, Emma - Total requirements: 32, Incomplete: 0, Completed: 100%

Type	Syllabus ID	Syllabus	Course ID	Course	Attended	Freq	Expires	Score	Status
Requirement	MILTESTENG	Test Engineering	[illegible] 03	Test Engineering Management Policy	6/9/2017	0			Completed
Requirement	MILTESTENG	Test Engineering	730001834-VER-02	New Test Equipment Development Procedure	6/12/2017	0			Completed
Requirement	MILTESTENG	Test Engineering	730001835-VER-05	Process Validation Procedure for Milford	6/9/2017	0			Completed
Requirement	MILTESTENG	Test Engineering	730001836-VER-01	Sustaining Test Equipment Procedure	6/13/2017	0			Completed
Requirement	MILTESTENG	Test Engineering	730001936-VER-03	Test Method Validation Protocol	6/14/2017	0			Completed
Requirement	MILTESTENG	Test Engineering	730002232-VER-03	Process Validation Master Plan - Milford	6/14/2017	0			Completed
Requirement	MILTESTENG	Test Engineering	730002738-VER-00	New Product Intro Process - Milford (WIDP)	6/14/2017	0			Completed
Requirement	MILTESTENG	Test Engineering	730004135-VER-00	Installation Qualification Protocol	6/13/2017	0			Completed
Requirement	MILMFGOPSALL	All Milford Manufacturing & Support Personnel	EHS0000-VER-02	EHS Policies	6/6/2017	12	6/6/2018		Completed
Requirement	MILMFGOPSALL	All Milford Manufacturing & Support Personnel	LCDHR01-REV-01	Sexual Harassment Policy	6/9/2017	12	6/9/2018		Completed
Requirement	MILMFGOPSALL	All Milford Manufacturing & Support Personnel	QA0002-REV-01	Good Manufacturing Practices	6/12/2017	0			Completed
Requirement	MILMFGOPSALL	All Milford Manufacturing & Support Personnel	QA0008-REV-01	Quality Management Systems	6/13/2017	0			Completed

Document No.: TE02958-10R Iteration 00
Attachment: 7.2 Page: 1 of 1

IQ Test name: Associated Documentation Verification	**Test Script No.:** IQ-01
Equipment No./ID: TE82950	**Equipment Name:** Flow Splitter Tester
Installation Site: NPI: Milford, MA	

Purpose:
To verify that supporting documentation is available prior to the completion of qualification.

Test execution:

List all applicable documents (Preventive Maintenance, Calibration, Operating Procedures, Test Specification Procedures, Manufacturing Procedures, etc.) under the Document type header and then complete the table below. If applicable documents are unavailable state why in the comments section. All applicable documents must be in either Ready, Pre-Rel-Prod, or Release General state in SAP. Enter N/A for any parameter or cell that is not used or not applicable.

Objective evidence:

Completed Test Script Data Sheet

SAP Screen shot of below available document(s)

Document Type	Title; Doc. No.; Revision/Version No.	Status in SAP	Initial & Date
TSP	Flow Splitters TSP 735003156, Ver. 01	Release General	EEP 06 Dec 2017
CAL	TE82950 PM Procedure 735003478, Ver. 00	Release General	EEP 06 Dec 2017

N/A EEP 08 Jan 2018

Comments:

N/A EEP 08 Jan 2018

Overall Test Conclusion: ☒ Pass ☐ Fail

Copy this Test Script as needed

Iteration 00
Document No.: TE82950-IQR
Attachment: 7.3 Page: 1 of 1

IQ Test name: Site Verification	**Test Script No.:** IQ-02
Equipment No./ID: TE82950	**Equipment Name:** Flow Splitter Tester
Installation Site: NPI: Milford, MA	

Purpose:
To verify the location in which the test equipment is to be installed is suitable for use.

Test execution:
List any additional applicable environmental parameters in the Parameters column. Using the applicable equipment documentation, define the specifications in the Acceptance Criteria column, as appropriate. Verify and/or measure the applicable parameters and complete the table below. Do not delete any of the listed defined parameters. Enter N/A for any parameter or cell that is not used or applicable.

Objective evidence:
Completed Test Script Data Sheet.

Photo(s) of the work area, if applicable.

Copies of calibration certificates for gauges or meters used for measurement, if applicable.

Parameters	Acceptance criteria	As found	Pass/Fail	Initial & Date
Ambient Temperature	4-40°C	20.0°C	Pass	EEP 06 Dec 2017
Relative Humidity	20-80% non condensing	32.1%	Pass	EEP 06 Dec 2017
Workspace	Adequate space for testing and service	Adequate space	Pass	EEP 06 Dec 2017
Test Station Bench	Large and strong enough to support all equipment	Large and strong enough	Pass	EEP 06 Dec 2017
Electrical Supply	50/60Hz / 100-240 VAC	60.00Hz / 106.21 VAC	Pass	EEP 06 Dec 2017
Electrical Outlets	≥7	8	Pass	EEP 06 Dec 2017
Network Available	N/A	N/A	N/A	N/A

N/A EEP 08 Jan 2018

Comments:
Temp and humidity specified in Flow Splitters Functional Specification (Attachment 7.5)
↳ measured with Asset # 94408 (calibrated 18 Jan 2017)
Electrical supply specified in 715001350002, ver. 00
↳ measured with Asset # 98209 (calibrated 20 Dec 2016) EEP 06 Dec 2017

Overall Test Conclusion: ☒ Pass ☐ Fail

Iteration 00

Copy this Test Script as needed

Document No.: TE82950-IQR
Attachment: 7.4 Page: 1 of 1

Waters Quality System Documentation

APPROVAL SHEET
FUNCTIONAL SPECIFICATION DOCUMENT

Title:	Functional Specification Document for New AutoPurification™ Flow Splitters		
Author(s):	Bob Tacconi, Neal Almeida		
Date:	OCT. 12, 2006	Revision:	2

APPROVED BY:

Title	Name	Signature/Date (MMM/DD/YYYY)
Senior Mechanical Engineer	Neal Almeida	Neal B Almeida Oct. 18, 2006
Product Marketing Manager	Cecilia Mazza	Cecilia Mazza Oct 18, 2006
Evaluation Project Manager	Rob Herbert	[illegible] 16 Oct 2006
Development Project Manager	Bob Tacconi	Robert Tacconi OCT. 17, 2006

Next Generation #55

Iteration 00
Document No.: TE82950-10R
Attachment: 7.5 Page: 1 of 12

Waters Quality System Documentation

REVIEW COVER SHEET
FUNCTIONAL SPECIFICATION DOCUMENT

Title:	Functional Specification Document for New AutoPurification™ Flow Splitters		
Author(s):	Bob Tacconi, Neal Almeida		
Date:	OCT 12, 2006	**Revision:**	2
Return by:	OCT 19, 2006	**Return to:**	Bob Tacconi

Please review the attached document and mark with your comments. Then check the appropriate box below, sign, date, and return to me. If your name is on the list below is marked with an '*', your participation is mandatory. If you do not return the document, it will go out "as is". If there is anyone else who you think should review this, please pass it on to him or her. Thank you.

☐ Approved ☐ Approved with condition(s) ☐ Needs further review

Signature:_____ Date:_____

Distribution:

Title	Name
Product Marketing Manager	Cecilia Mazza
Evaluation Project Manager	Rob Herbert
Development Project Manager	Bob Tacconi
Senior Mechanical Engineer	Neal Almeida
Principal Mechanical Designer	John Auclair
CAG Project Manager	Tom Moretti
CAG Project Engineer	Lou Andreotti
NPI Program Manager	Ramki Tirur
NPI Project Engineer	Tim Norton
Test Engineer	Matt Brule
Senior Business Development Manager	Warren Potts III
Senior Applications Chemist	Paul Lefebvre
Development Evaluation Engineer	Owen Rehrauer
Technical Product Manager	Jim Kehoe
Reliability Engineering Manager	Burt Bliss
Reliability Engineering Project Engineer	Bill Rosati
Senior Technical Writer; Technical Communications Group	Colleen Corrice
Technical Writer; Service Communications Group	Ray Vezina

Iteration 08

Document No.: TE82958-10R

Attachment: 7.5 Page: 2 of 12

New AutoPurification™ Flow Splitters

Functional Specification Document

For Internal Use Only

Deviation 00
Document No.: TE82950-10R
Attachment: 7.5 Page: 3 of 12

Author: Bob Tacconi
Neal Almeida

TABLE OF CONTENTS

1. Introduction 5
1.1. Purpose 5
1.2. Scope 5
1.3. Definitions, Acronyms, and Abbreviations 5
1.4. References 5
1.4.1. Marketing Requirements 5
1.4.2. Development Plan 5
2. General Description 5
3. Main Features and design Attributes: 6
4. Physical Specifications 6
4.1. 6
4.2. 6
4.3. 6
5. Materials of Construction: 6
5.1. 6
5.2. 6
5.3. 6
5.4. 6
5.5. 6
6. Performance Specifications: 7
6.1. 7
6.2. 7
6.3. 7
6.4. 7
6.5. 7
7. Operating Environmental Specifications: 7
7.1. 7
7.2. 7
8. Test Flow Rates Specifications: 7
8.1. 7
8.2. 7
8.3. 7
8.4. 7
8.5. 7
8.6. 7
9. Transporation and Storage Specification (Refer to WAT056529) 8

Iteration 00
Document No.: TE82950-IQR
Attachment: 7.5 Page: 4 of 12

9.1. 8
9.2. 8
9.3. 8
9.4. 8
10. Regulatory requirements: 8
11. Reliability Targets: 8
12. Functional Requirements 8
12.1. Interconnection Diagram: 9
12.2. The New AutoPurification flow splitters shall be a family of six modules based on the same platform and design principles, but scale appropriately for the flow rates of interest. 10
12.3. 10
12.4. 10
12.5. 10
12.6. 10
12.7. 10
12.8. 10
12.9. The New AutoPurification flow splitters shall be compatible with the same solvents as the 2525 & 2545 Binary Gradient Module (BGM) products: 10
13. Document Changes 10
14. TRACEABILITY TABLE 10

Iteration 00
Document No.: TE92950-10R
Attachment: 7.5 Page: 5 of 12

1. INTRODUCTION

1.1. Purpose

The purpose of this document is to define and sufficiently detail the main features, elements and specifications for the Waters Flow splitters. The Waters Flow Splitters are required elements of the Next Generation Purification (NGP) Development effort.

1.2. Scope

The scope of this development effort is to complete the design and commercialization tasks for a family of flow splitter products that are equal to (and in many ways better than) the performance and cost structure of the current product offerings from LC Packings (Dionex).

1.3. Definitions, Acronyms, and Abbreviations

MUP	Makeup Pump
NGP	Next Generation Purification
F/C	Fraction Collector
SFO	System Fluidics Organizer
SEI	Sales End Item

Iteration 00
Document No.: TE82950-10R
Attachment: 7.5 Page: 6 of 12

1.4. References

1.4.1. Marketing Requirements
Author Cecilia Mazza MRD Version 2, Date AUG. 18, 2006

1.4.2. Development Plan
Author: Bob Tacconi DP Version 0, Date: APR. 24, 2006

2. GENERAL DESCRIPTION

Flow splitters are required elements in all MS directed purification systems. The flow splitter is fluidically interposed between the preparative outlet (PREP OUT) and the fraction collector inlet (Collect IN). The flow splitter is principally a fluidic H-bridge design in which a small percentage of the column effluent is split off and delivered to the detectors of interest by the MUP. The majority of the column effluent is directed through the delay coil and to the fraction collector.

The H-bridge splitter is a design composed of a fused silica capillary interposed between two fluidic TEES. The flow splitter has two fluidic inputs and two fluidic outputs. The interconnection diagram show later in this document reveals the interconnection and intraconnection details for the entire flow splitter assembly.

The delay coil is required in order to provide sufficient time (at the flow rates of interest) for the peak detection and the collection decision to take place. The delay coils incorporated in these modules are based on the knotted tube assemblies currently used in the UV Fraction Manager product. The main advantage of the knotted tube as compared to a straight (and even coiled) tube is the reduction in resulting peak dispersion. The peak dispersion is minimized because the knitted tube generates a radial flow component in addition to the axial flow through the tube. The radial flow term mimics the onset of turbulent flow and therefore minimizes the dispersion that is typically found tin laminar flow through long straight tubes. The main disadvantage of the knitted tube design is the radial flow term creates additional friction and therefore increases the resulting backpressure. Since metal tubes cannot easily be knotted, these tubes need to be constructed of chemically compatible fluoropolymers

such as FEP and ETFE. The tube parameters need to be carefully considered in order to ensure sufficient operating pressure margin at the flow rates and solvents of interest.

The only other elements involved in the splitter product is the enclosure that is needed to protect the splitter and delay coils as well as present the module as a thoughtfully considered, high-value product.

3. MAIN FEATURES AND DESIGN ATTRIBUTES:

- A product family composed of six modules, each sized for the specific purification column geometries of interest. The details of these modules are summarized in a table located in this document.
- All fluidic interconnections on the front face for easy access and ease of installation/removal from the SFO.
- Proper labeling of each of the Inputs and Outputs for mistake-proofing.
- Proper labeling of the flow rate input ranges and nominal split ratios.
- Provision to manage a leak in the event of an internal failure (such as a delay coil rupture).
- Provisions for accommodating a leak sensor if required by the end-user.
- Thoughtful enclosure design to reside within the SFO accommodations and provisions.
- Primary filters on both flow inputs (INLETS) that are easily accessible and replaceable.
- A secondary filter on the restrictor inlets (capillaries) protecting the most susceptible fluid element from premature plugging.

4. PHYSICAL SPECIFICATIONS

Item	Description	Specification
4.1.	Height	2.0 inches MAX
4.2.	Width	4.4 inches MAX
4.3.	Depth	8.5 inches MAX

5. MATERIALS OF CONSTRUCTION:

Item	Description	Materials
5.1.	Splitter	316 SST, Nitronic 60, Fused Silica Capillary, PEEKSil
5.2.	Delay Coils	Fluorpolymers (FEP, PFA, ETFE)
5.3.	Fluidic Inputs/Outputs	316 SST, Nitronic 60 or PEEK
5.4.	Enclosure	Aluminum
5.5.	Enclosure Finish	Light Gray (per Waters specification WAT251250)

Iteration 00
Document No.: TE82950-1QR
Attachment: 7.5 Page: 7 of 12

6. PERFORMANCE SPECIFICATIONS:

Item	Description	Specification
6.1.	Split Ratio Accuracy	+/- 20% at Specified Nominal Rates
6.2.	Peak Dispersion	Less than 20% on Peak Area at Nominal Flow Rates
6.3.	Minimum Delay	Five Seconds min. at the max. specified flow rates
6.4.	Maximum Backpressure (Dynamic Pressure)	750 psig at the maximum specified flow rates with H_2O at 25 ° C. *(This is the maximum pressure that the flow splitter would exert on the "up-stream" system components)*
6.5.	Max.Service Pressure (Static Pressure)	1000 psig (279001314; 650 psig Max.) *(This is allowable pressure that the "down-stream" system components can exert on the flow splitter)*

7. OPERATING ENVIRONMENTAL SPECIFICATIONS:

Item	Description	Specification
7.1.	Temperature	4 to 40 °Celsius
7.2.	Humidity	20 to 80% non condensing

8. TEST FLOW RATES SPECIFICATIONS:

Item	Splitter P/N	Split Ratio	Min. Flow Rate [mL/min]	Max. Flow Rate [mL/min]	Nominal Flow Rate [mL/min]	Test Solvent (at 25 Degrees Celsius)
8.1.	279001309	10:1	0.5	2.0	1.25	Water
8.2.	279001310	100:1	2.0	8.0	5.00	Water
8.3.	279001311	1000:1	8.0	30.0	20.00.	Water
8.4.	279001312	5000:1	8.0	30.0	20.00.	Water
8.5.	279001313	5000:1	30.0	100.0	65.00	Water
8.6.	279001314	10,000:1	100.0	150.0	125.00.	Water

9. ELECTRICAL CONSIDERATIONS:

9.1. The flow splitter enclosure must include an appropriate ground stud and ground stud label. The flow splitter kits must also include an appropriate ground cable assembly that will be used to connect the flow splitter chassis ground to the ground stud on the SFO chassis assembly.

Iteration 00
Document No.: TE82950-1QR
Attachment: 7.5 Page: 8 of 12

10. TRANSPORATION AND STORAGE SPECIFICATION (REFER TO WAT056529)

Item	Description	Specification
10.1.	Temperature	-40° C to 60° Celsius
10.2.	Relative Humidity	10 to 90 percent non condensing
10.3.	Shock (Drop)	Per ASTM D 4169-90
10.4.	Vibration	Per ASTM D 4169-90

11. REGULATORY REQUIREMENTS:

There are no regulatory requirements envisioned for the flow splitter product family. There are no electrical power elements associated with the flow splitter modules.

12. RELIABILITY REQUIREMENTS:

The reliability targets for the flow splitters are summarized in the following table:

Item	Description	Specification
12.1.	Operating Shift	8 hours per day
12.2.	Operating Week	5 days per week
12.3.	Flow Rate	30 mL / min
12.4.	MTBF	52 weeks (any filter element)

13. MAINTAINABILTY REQUIREMENTS:

The passive flow splitter design represents a product offering where all of the elements that may require removal and replacement could be, and should be performed by the AutoPurification system operator as required. There are no identified hazards inside of the flow splitter enclosure and therefore the operator should be permitted to gain access in to it and remove and replace all serviceable elements as required.

14. SERVICE REQUIRMENTS:

The following table summarizes the replaceable elements that must be procurable by either our Field Service Engineers (FSEs) as well as our AutoPurification customers.

Item	Description
14.1.	Filters
14.2.	Splitter Restrictors
14.3.	Delay Coils
14.4.	De-sensitizing Tube Assemblies

Iteration 00
Document No.: TE82950-IQR
Attachment: 7.5 Page: 9 of 12

15. FUNCTIONAL REQUIREMENTS

15.1. Interconnection Diagram:

The following diagram provides the basic fluidic inter and intraconnections for the family of flow splitters products.

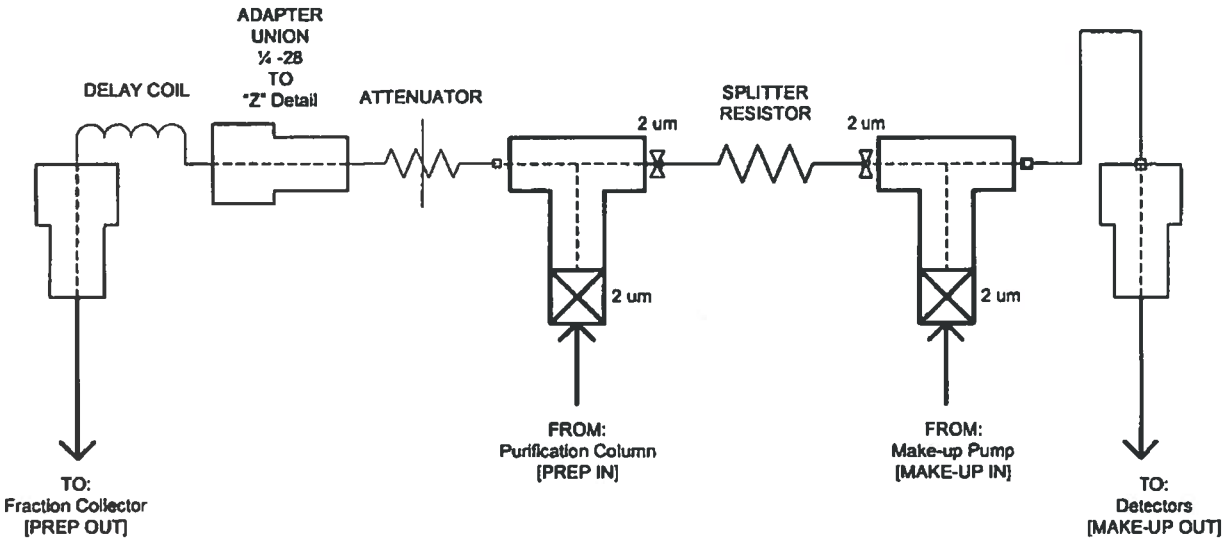

Iteration 00
Document No.: TE82950-10R
Attachment: 7.5 Page: 10 of 12

15.2. The New AutoPurification flow splitters shall be a family of six modules based on the same platform and design principles, but scaled appropriately for the flow rates of interest.

Item	Kit Part Number	Part Number	Description	Split Ratio	Targeted Column ID [mm]	Applicable Flow Rate Range [mL/min]
15.3.	205000435	279001309	ASSY, FLOW SPLITTER, 10:1, 0.5 - 2.0 mL	10:1	4	0.5 – 2.0
15.4.	205000436	279001310	ASSY, FLOW SPLITTER, 100:1, 2.0 - 8.0 mL	100:1	7.8 - 10	2.0 - 8.0
15.5.	205000437	279001311	ASSY, FLOW SPLITTER, 1000:1, 8.0 - 30.0 mL	1000:1	19	8.0 – 30.0
15.6.	205000438	279001312	ASSY, FLOW SPLITTER, 5000:1, 8.0 - 30.0 mL	5000:1	30	8.0 – 30.0
15.7.	205000439	279001313	ASSY, FLOW SPLITTER, 5000:1, 30.0 - 100.0 mL	5000:1	30	30 – 100
15.8.	205000440	279001314	ASSY, FLOW SPLITTER, 10,000:1, 100.0 - 150.0 mL	10,000:1	50	100 – 150

15.9. The New AutoPurification flow splitters shall be compatible with the same solvents as the 2525 & 2545 Binary Gradient Module (BGM) products:

Item	Description	Specification
15.10.	Common Solvents & Common Modifiers (this is not a comprehensive list)	Reverse Phase: H2O,MeOH, MeCN, THF Normal Phase: IPA, Hexane Ethyl Acetate pH Range: 1-12 Modifiers: TFA, Formic Acid, Ammonium Acetate

Iteration 00
Document No.: TE82958-10R
Attachment: 7.5 Page: 11 of 12

16. DOCUMENT CHANGES:

Rev	Description	Revision Date
A	Originated	JUN 10, 2006
1	Revised	JUN 23, 2006
2	Revised	OCT 09, 2006

17. TRACEABILITY TABLE:

Description	MRD Reference	FSD Reference
Passive Flow Splitters	4.2.6.1	14.2
Normal Phase Solvent Compatibility	4.2.6.2	14.9

18. APPENDIX:

18.1. Structured Break-down Diagram:

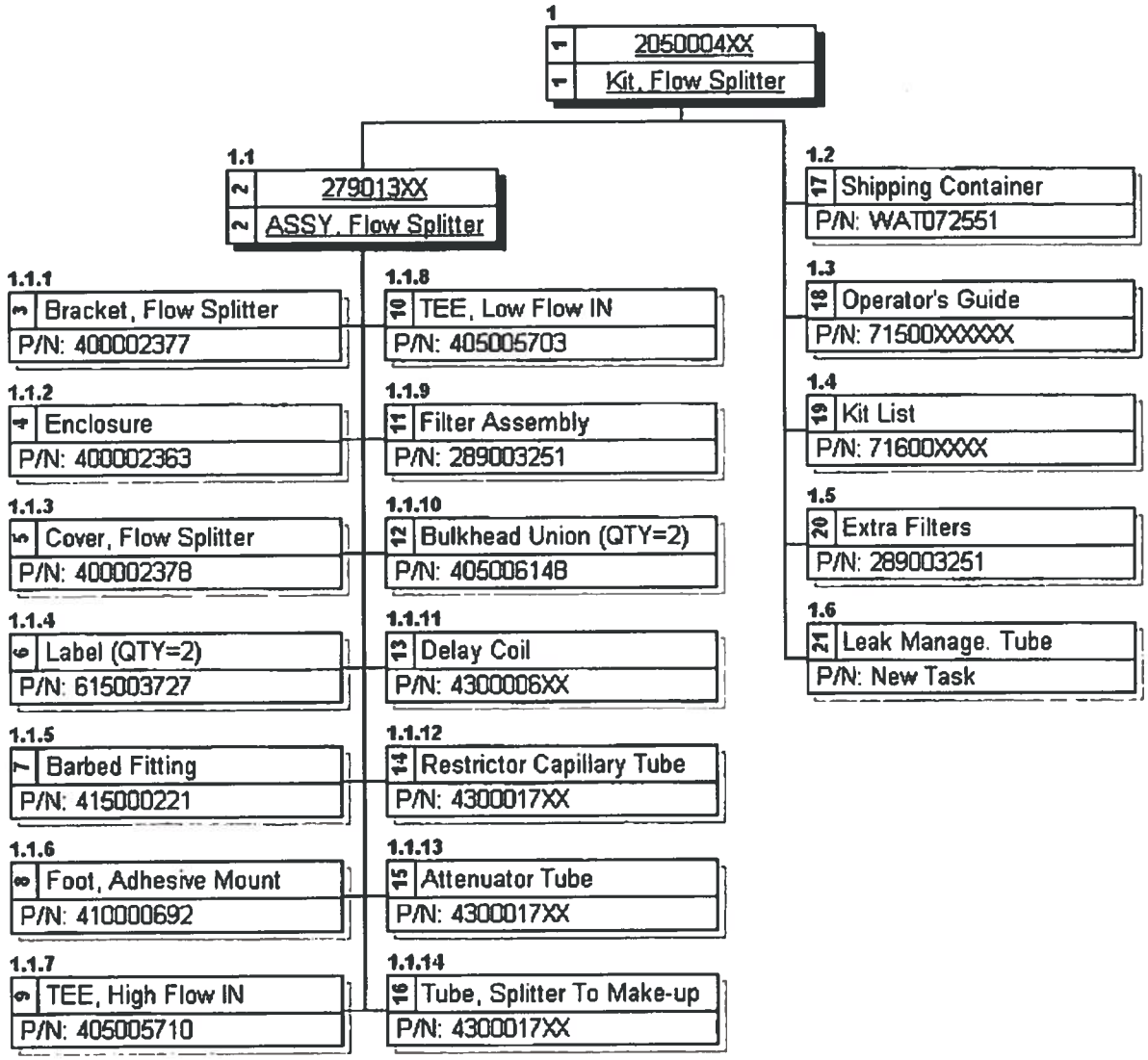

Iteration 00
Document No.: TE82958-1QR
Attachment: 7.5 Page: 12 of 12

EXTECH INSTRUMENTS

ISO 9001 Certified

FLIR Systems, Inc. • 9 Townsend West • Nashua, NH 03063

Waters Asset # 94408 PD 15 Jan 2018

Certificate of Calibration

Certificate Number: 162362
Document Number: 115469

Customer Details:

Customer Name: WATERS CORP

Instrument Details:

Manufacturer:	EXTECH INSTRUMENTS	**Calibration Date:**	January 18, 2017
Description:	HUMIDITY & TEMPERATURE PEN	**Calibration Due:**	January 18, 2018
Model Number:	445580	**Cal. Interval:**	12 MONTHS
Serial Number:	Z346508	**As Received:**	NEW
Equip. ID Number:	N/A		

Environmental Details:

Temperature: 21 Deg. +/- 5 C **Relative Humidity:** 40 % +/- 15 %

Procedures Used:

Calibration Procedure: EICM445580-CP

Certification

Extech Instruments certifies that the instrument listed above meets the specifications of the manufacturer at the completion of its calibration. Standards used are traceable to the National Institute of Standards and Technology (NIST), or have been derived from accepted values, natural physical constants, or through the use of the ratio method of self-calibration techniques. Methods used are in accordance with ISO 10012-1 and ANSI/NCSL Z540-1-1994. This certificate is not to be reproduced other than in full, except with prior written approval of Extech Instruments Corporation. All the calibration standards used have an accuracy ratio of 4:1 or better, unless otherwise stated.

Technicians Notes:

Technician: TERI KING **Approved By:** Steven C. Lord

Iteration 02

Document No.: TE82950-1QR

Attachment: 7.6 **Page:** 1 **of** 2

For calibration service, E-mail: repair@extech.com

Certificate of Calibration

Certificate Number: 162362
Document Number: 115469
Model Number: 445580 **S/N:** Z346508

As Received

Calibration Data

Standard	UUT	Accuracy	High Limit	Low Limit	Error	Status
Function: *Humidity*						
33.0% RH	33.5	+/-(5% RH)	38.0	28.0	0.5	PASS
75.0% RH	75.4	+/-(5% RH)	80.0	70.0	0.4	PASS
Function: *Temperature*						
21.0 Deg C	21.2	+/-(1 Deg C)	22.0	20.0	0.2	PASS

Final Reading

Calibration Data

Standard	UUT	Accuracy	High Limit	Low Limit	Error	Status
Function: *Humidity*						
33.0 % RH	33.5	+/-(5% RH)	38.0	28.0	0.5	PASS
75.0 % RH	75.4	+/-(5% RH)	80.0	70.0	0.4	PASS
Function: *Temperature*						
21.0 Deg C	21.2	+/-(1 Deg C)	22.0	20.0	0.2	PASS

UUT-Unit Under Tes

Standards Used

Manufacturer	Model #	Serial #	Description	Cal. Due Date
OMEGA	RHCL-2	52175/2A4794X	RH CALIBRATOR	November 18, 2017

Iteration 00
Document No.: TE82958-IQR
Attachment: 7.6 Page: 2 of 2

For calibration service, E-mail: repair@extech.com

ESSCO CALIBRATION LABORATORY

DIVISION OF WALSH ENGINEERING SERVICES, INC.

CALIBRATION/REPAIR OF ALL TYPES OF ELECTRONIC / MECHANICAL TEST EQUIPMENT
27 INDUSTRIAL AVE, CHELMSFORD, MA 01824-3618
TEL: (800) 325-2201 (978) 250-0880 www.esscolab.com

NVLAP LAB CODE 200972-0

CERTIFICATE OF CALIBRATION

ISSUE DATE: 12/20/2016 **Certificate #: 1432411**

CUSTOMER / LOCATION
WATERS CORPORATION - 5 @
34 MAPLE STREET
DEPT TE
MILFORD, MA 01757
DEPT: WP72
PURCHASE ORDER:

EQUIPMENT INFORMATION
MANUFACTURER:FLUKE
MODEL NO:189
SERIAL NO:91000013
CONTROL NO:98209
TYPE: DMM

AS FOUND	**IN TOLERANCE**
AS LEFT	**IN TOLERANCE**

Remarks:
ON SITE

METHOD / ENVIRONMENT

PERFORMED: ON SITE
METHOD: FLUKE 187/189
TEMPERATURE (deg C): 22
REL HUMIDITY (%RH): 19

CALIBRATION

CALIBRATION DATE:20/Dec/2016
CALIBRATION DUE: 31/Dec/2017
METROLOGIST: B. Brunell

Standards Used To Calibrate Equipment

I.D.	Template	Type Equipment	Report No.	Last Cal. Date	Cal. Due Date
E3434	@ FLUKE 5522A-OPT SC1100	CALIBRATOR	1370078	08/01/2016	09/01/2017

Document No.: TE82658-102
Iteration 00
Attachment: 7-7 Page: 1 of 5

The ESSCO Quality System is accredited to ISO 17025:2005

The results above relate only to the item(s) calibrated. Expanded uncertainties were calculated per ISO "Guide to the Expression of Uncertainty Measurement", (GUM) with 95% confidence level and a coverage factor of k =2. This certificate shall not be reproduced, except in full, without written approval of ESSCO. The user should consider the measurement uncertainty when assessing the metrological status of the equipment.

This document certifies that the unit conformed to applicable specifications upon successful completion of the calibration. Any number of factors may cause the calibration item to drift out of calibration before the recommended interval has expired. The standards used are traceable to NIST or a National Measurement Institute.

This calibration was performed in compliance with the ESSCO Quality System manual, ECL1 Rev 36, dtd 16 Dec 2015, ISO/IEC 17025:2005, ISO 9001:2008, ANSI/NCSL Z540-1 part 1, ISO 10012:2003, ISO 13485, TS 16949, and when required contractually, 10CFR21 and 10CFR50 App. B.

This report must not be used to claim product certification, approval, or endorsement by NVLAP, NIST, or any agency of the Federal Government.

Kevin R. Pistey
Releasing Authority

Test Points

Seq.	Description	Nominal	Tolerance	Unit Measure	As Found	As Left	Uncertainty
1	DCmV, 500mV RNG	0.00	0.20 -0.20	mV	0.00	0.00	0.0067 mV
2	DCmV, 500mV RNG	500.00	500.17 499.83	mV	499.98	499.98	0.035 mV
3	DCmV, 3000mV RNG	2000.0	2001.0 1999.0	mV	1999.9	1999.9	0.13 mV
4	DCmV, 3000mV RNG	-3000.0	-2998.7 -3001.3	mV	-2999.8	-2999.8	0.19 mV
5	DC VOLTAGE, 5V RNG	0.0000	0.0010 -0.0010	V	0.0000	0.0000	0.000082 V
6	DC VOLTAGE, 5V RNG	5.0000	5.0023 4.9977	V	4.9998	4.9998	0.00035 V
7	DC VOLTAGE, 5V RNG	-5.0000	-4.9977 -5.0023	V	-4.9999	-4.9999	0.00035 V
8	DC VOLTAGE, 50V RNG	-50.000	-49.982 -50.018	V	-49.998	-49.998	0.0038 V
9	DC VOLTAGE, 500V RNG	-500.00	-499.48 -500.52	V	-499.99	-499.99	0.049 V
10	DC VOLTAGE, 1000V RNG	-500.0	-499.3 -500.7	V	-500.0	-500.0	0.076 V
11	ACmV @ 100KHz, 50mV RNG	2.500	2.915 2.085	mV	2.264	2.264	0.048 mV
12	ACmV @ 20KHz, 50mV RNG	50.000	53.150 46.850	mV	48.207	48.207	0.081 mV
13	ACmV @ 100KHz, 50mV RNG	50.000	57.540 42.460	mV	45.601	45.601	0.33 mV
14	ACmV @ 10KHz, 500mV RNG	500.00	525.40 474.60	mV	482.49	482.49	0.24 mV
15	ACmV @ 20KHz, 3000mV RNG	3000.0	3049.0 2951.0	mV	2982.1	2982.1	2.8 mV
16	ACmV @ 100KHz, 3000mV RNG	3000.0	3244.0 2756.0	mV	2936.7	2936.7	10.3 mV
17	AC VOLTAGE @ 100KHz, 5V RNG	0.2500	0.2740 0.2260	V	0.2368	0.2368	0.00089 V

Document No: TE2295B-10R Iteration 00
Attachment: 7.7 Page: 2 of 5

Test Points

Seq.	Description	Nominal	Tolerance	Unit Measure	As Found	As Left	Uncertainty
18	AC VOLTAGE @ 20KHz, 5V RNG	5.0000	5.0790 4.9210	V	4.9762	4.9762	0.0076 V
19	AC VOLTAGE @ 100KHz, 5V RNG	5.0000	5.4040 4.5960	V	4.7627	4.7627	0.033 V
20	AC VOLTAGE @ 700Hz, 50V RNG	50.000	50.240 49.760	V	50.037	50.037	0.036 V
21	AC VOLTAGE @ 20KHz, 50V RNG	50.000	50.790 49.210	V	50.114	50.114	0.22 V
22	AC VOLTAGE @ 100KHz, 50V RNG	50.000	54.040 45.960	V	48.568	48.568	0.22 V
23	AC VOLTAGE @ 65Hz, 500V RNG	500.00	502.40 497.60	V	499.89	499.89	0.38 V
24	AC VOLTAGE @ 65Hz, 1000V RNG	500.0	506.0 494.0	V	499.9	499.9	0.38 V
25	FREQUENCY @ 1V	20.000	20.002 19.998	kHz	20.000	20.000	0.00058 kHz
26	DUTY @ 500Hz 2.2Vpp	30.00	38.18 21.82	%	27.88	27.88	0.0058%
27	AC+DC @ 20KHz 3000R	1000.0	1024.0 976.0	mV	997.9	997.9	0.99 mV
28	AC+DC @ 20KHz 50RNG	50.000	51.040 48.960	V	49.967	49.967	0.090 V
29	RESISTANCE, 500 ohm RNG	0.00	0.10 -0.10	Ohm	0.00	0.00	0.011 ohm
30	RESISTANCE, 500 ohm RNG	500.00	500.35 499.65	Ohm	499.99	499.99	0.12 ohm
31	RESISTANCE, 5 kohm RNG	5.0000	5.0027 4.9973	kohm	4.9991	4.9991	0.0012 kohm
32	RESISTANCE, 50 kohm RNG	50.000	50.027 49.973	kohm	49.987	49.987	0.012 kohm
33	RESISTANCE, 500 kohm RNG	500.00	500.27 499.73	kohm	499.90	499.90	0.15 kohm
34	RESISTANCE, 5 Mohm RNG	5.0000	5.0079 4.9921	Mohm	5.0047	5.0047	0.0041 Mohm
35	RESISTANCE, 30 Mohm RNG	30.000	30.304 29.696	Mohm	30.054	30.054	0.035 Mohm
36	RESISTANCE, 500 Mohm RNG	100.0	110.2 89.8	Mohm	99.9	99.9	0.59 Mohm
37	nS 50 RNG OPEN	0.00	0.10 -0.10	ns	-0.02	-0.02	0.0058 nS
38	nS 50 RNG 100 Mohm	10.00	10.20 9.80	ns	9.97	9.97	0.064 nS
39	DCμA, 500μA RNG	0.00	0.20 -0.20	μA	0.01	0.01	0.0058 μA

Document No.: TE82950-102 Iteration 00
Attachment: 7.7 Page: 3 of 5

Test Points

Seq.	Description	Nominal	Tolerance	Unit Measure	As Found	As Left	Uncertainty
40	DCμA, 500μA RNG	500.00	501.45 498.55	μA	500.06	500.06	0.13 μA
41	DCμA, 500μA RNG	-500.00	-498.55 -501.45	μA	-499.84	-499.84	0.13 μA
42	DCμA, 5000μA RNG	5000.0	5012.7 4987.3	μA	4999.9	4999.9	0.64 μA
43	DCmA, 50mA RNG	0.000	0.010 -0.010	mA	-0.001	-0.001	0.0039 mA
44	DCmA, 50mA RNG	50.000	50.085 49.915	mA	50.015	50.015	0.0096 mA
45	DCmA, 50mA RNG	-50.000	-49.915 -50.085	mA	-50.014	-50.014	0.0096 mA
46	DCmA, 400mA RNG	-329.00	-328.49 -329.51	mA	-329.05	-329.05	0.042 mA
47	DC CURRENT, 5A RNG	0.0000	0.0010 -0.0010	Amp	-0.0002	-0.0002	0.00039 A
48	DC CURRENT, 5A RNG	5.0000	5.0260 4.9740	Amp	5.0010	5.0010	0.0038 A
49	DC CURRENT, 5A RNG	-5.0000	-4.9740 -5.0260	Amp	-5.0018	-5.0018	0.0038 A
50	DC CURRENT, 10A RNG	-6.000	-5.968 -6.032	Amp	-6.002	-6.002	0.0046 A
51	ACμA @ 1KHz, 500μA RNG	500.00	503.95 496.05	μA	500.45	500.45	1.01 μA
52	ACμA @ 1KHz, 5000μA RNG	1500.0	1511.8 1488.2	μA	1501.3	1501.3	2.08 μA
53	ACmA @ 1KHz, 500mA RNG	2.500	2.539 2.461	mA	2.506	2.506	0.0033 mA
54	ACmA @ 10KHz, 400mA RNG	329.00	334.04 323.96	mA	329.43	329.43	2.31 mA
55	AC CURRENT @ 1KHz, 5A RNG	0.2500	0.2578 0.2422	Amp	0.2506	0.2506	0.00061 A
56	AC CURRENT @ 10KHz, 5A RNG	0.2500	0.2690 0.2310	Amp	0.2541	0.2541	0.0021 A
57	AC CURRENT @ 1KHz, 10A RNG	6.000	6.095 5.905	Amp	5.997	5.997	0.025 A
58	CAPACITANCE, OPEN <0.070 nF			CHECK	PASS	PASS	0.059 nF
59	CAPACITANCE, 110nF RNG	100.0	101.5 98.5	nF	99.9	99.9	0.41 nF
60	CAPACITANCE, 11μF RNG	5.00	5.10 4.90	μF	4.98	4.98	0.032 μF
61	DIODE 3.1V RNG	1.0000	1.1000 0.9000	V	1.0006	1.0006	0.00018 V

Attachment: 7.7 Page: 4 of 5
Document No: TE82958-108
Version 00

Test Points

Seq.	Description	Nominal	Tolerance	Unit Measure	As Found	As Left	Uncertainty
62	TEMPERATURE, K TYPE	-10.0	-8.9 -11.1	° C	-9.8	-9.8	0.23°C
63	TEMPERATURE, K TYPE	0.0	1.0 -1.0	° C	0.2	0.2	0.23°C
64	TEMPERATURE, K TYPE	350.0	355.0 345.0	° C	350.3	350.3	0.33°C

End of Data

Note: A = Adjusted F = Failed L = Limited ** = Outside Scope of Accreditation

Deviation 28
Document No.: TE82950-10R
Attachment: 7.7 Page: 5 of 5

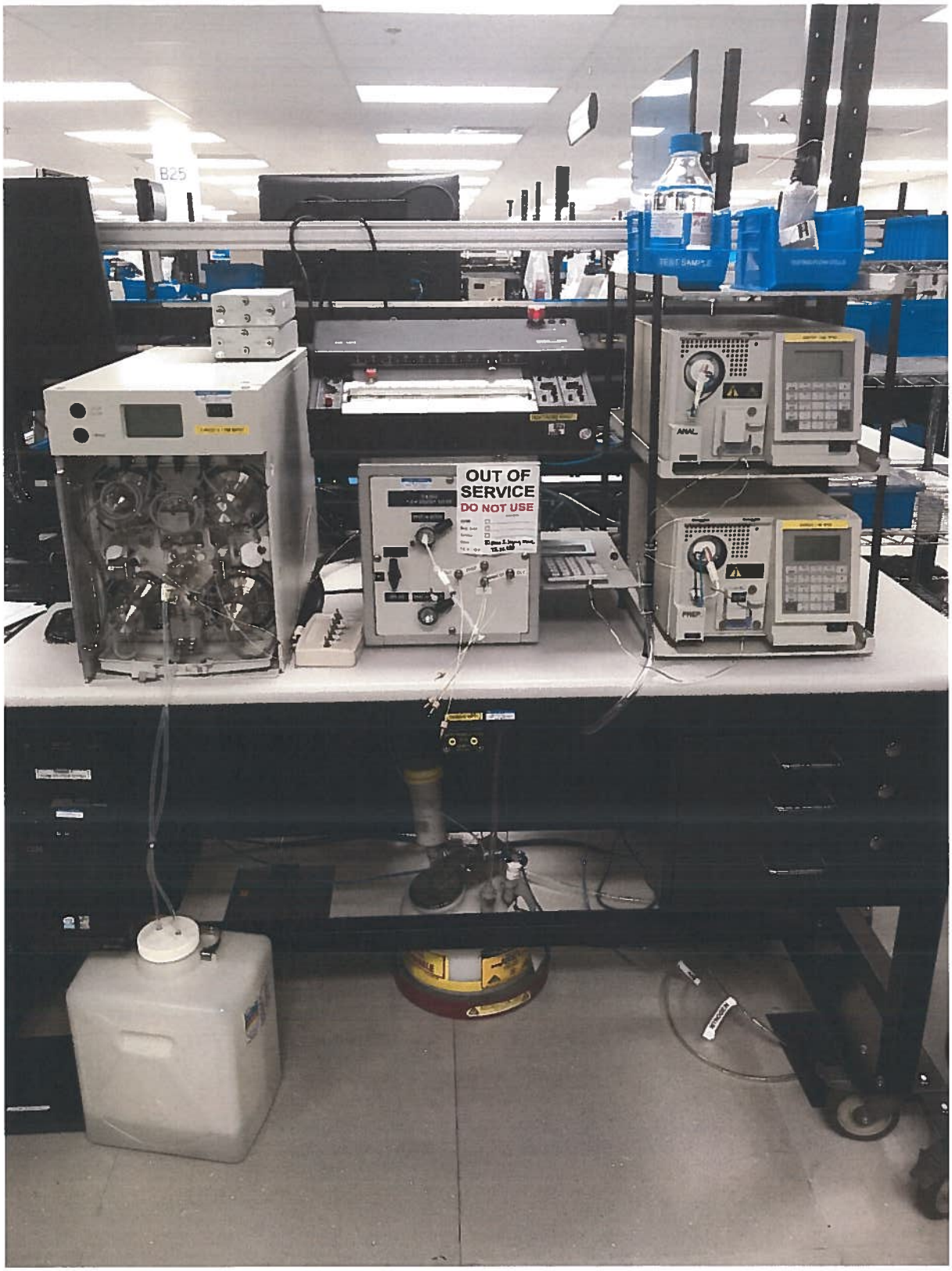

Iteration 00

Document No.: TE82950-10R

Attachment: 7.8 Page: 1 of 1

IOQ Test name: Instrumentation Calibration Verification **Test Script No.:** IQ-03

Equipment No./ID: TE82950 **Equipment Name:** Flow Splitter Tester

Installation Site: NPI: Milford, MA

Purpose:
To verify that all critical instruments are in the calibration system and calibrated or a preventive maintenance has been performed, as appropriate.

Test execution:
List all critical instruments/components and/or sub-systems (System, TUV, Sample Manager, BSM, Column Manager, Test Solutions, Meters, Gauges, Scales, etc.) in the Description column and complete the table below. Verify that all critical instruments have had a preventive maintenance and/or calibration performed, in accordance with the PM and/or Calibration procedures, and have been included in the preventive maintenance/calibration schedule. For test solutions note the expiration date. Enter N/A for any parameter or cell that is not used or applicable.

Objective evidence:
Completed Test Script Data Sheet

Copies of calibration and/or maintenance certificates.

Description	Waters P/N and Asset No.	Serial Number	Last Cal/PM Performed Date	PM Cal/Due / Expiration Date	Initial & Date
Flow Splitter Tester	TE82950	N/A	19 Jan 2017	Jan 2018	EEP 08 Jan 2018
Waters 2487 UV/ Visible Detector	P/N: WAT081110 ID: 82291	A02487446M	02 Jan 2018	Jan 2019	EEP 08 Jan 2018
Waters 2487 UV/ Visible Detector	P/N: WAT081110 ID: 83011	E03487784M	02 Jan 2018	Jan 2019	EEP 08 Jan 2018
Waters BGM Pump	P/N: 279025450 ID: 83014	F06APB003N	02 Jan 2018	Jan 2019	EEP 08 Jan 2018
BBC SE120 Analog Chart Recorder	ID: TR280	8453385	25 Apr 2017	Apr 2018	EEP 08 Jan 2018

N/A EEP 08 Jan 2018

Comments:

N/A EEP 08 Jan 2018

Overall Test Conclusion: ☒ Pass ☐ Fail

Iteration 00

Copy this Test Script as needed

Document No.: TE82950-1012

Attachment: 7.9 Page: 1 of 1

TE82950

File Action Edit View Help

New

EQUIPMENT MASTER: TE82950

Identifier: TE82950

Component ID:

EQUIPMENT SUPPORT SCHEDULING HISTORY

Add Event Add Similar Remove Event

Event Name	Event Type	Due Date
12 Month	Maintenance	31 Jan 2018

Event Type: Maintenance

Event Name: 12 Month

View Audit Trail ... Add History for this Event

DATES DETAILS SUPPORT MAINTENANCE

Due Date: 31 Jan 2018

Future Due Date: 31 Jan 2019

Last Action Date: 19 Jan 2017

Basis for Date Calculation: Date of Event

Interval: Month (End of Month)

Number: 12

Reminder Date:

Reminder Days:

Scheduled Person:

Work Flow Template:

Iteration 00

Document No.: TE82950-10R

Attachment: 7.10 Page: 1 of 1

Appendix 2: Calibration/PM Record

Check all that apply: Calibration ☐ PM ☑

Date: 19 JAN 2017
Equipment. I.D.: TE82950
Due Date: JAN 2017
Interval (Months) 12 Months
Procedure: 735003478 Rev. A

Technician: Bill Bates
Description: Flow splitter tester
Location: Clean Room
Next Due Date: JAN 2018

Equipment Used:

Item	Serial Number/ID Number	Calibration or PM Date
	N/A	
	BB	

Calibration Results:

Procedure Step	Nominal (Include Tolerance)	As Found Result	As Left Result	Comments
			N/A	
			BB	

Calibration Adjustment(s) Made? Yes ☐ No ☑

Note: If outside of the specified tolerances for calibration, send Out of Calibration Notice

Preventive Maintenance:

Procedure Step	Action(s) Taken
1	Performed computer maintenance
2	Verified pressure decay test passed

Iteration ~~00~~
Document No.: TE82950 - 1QR
Attachment: 7.11 **Page:** 1 of 2

Verification Results: Pass ☑ Fail ☐

Notes: See Attached

No field should be left blank; Insert "N/A" if Not Applicable

PREVENTIVE MAINTENANCE
ID TE-82950
BY TF DATE 19 JAN 16
DUE JAN 2017

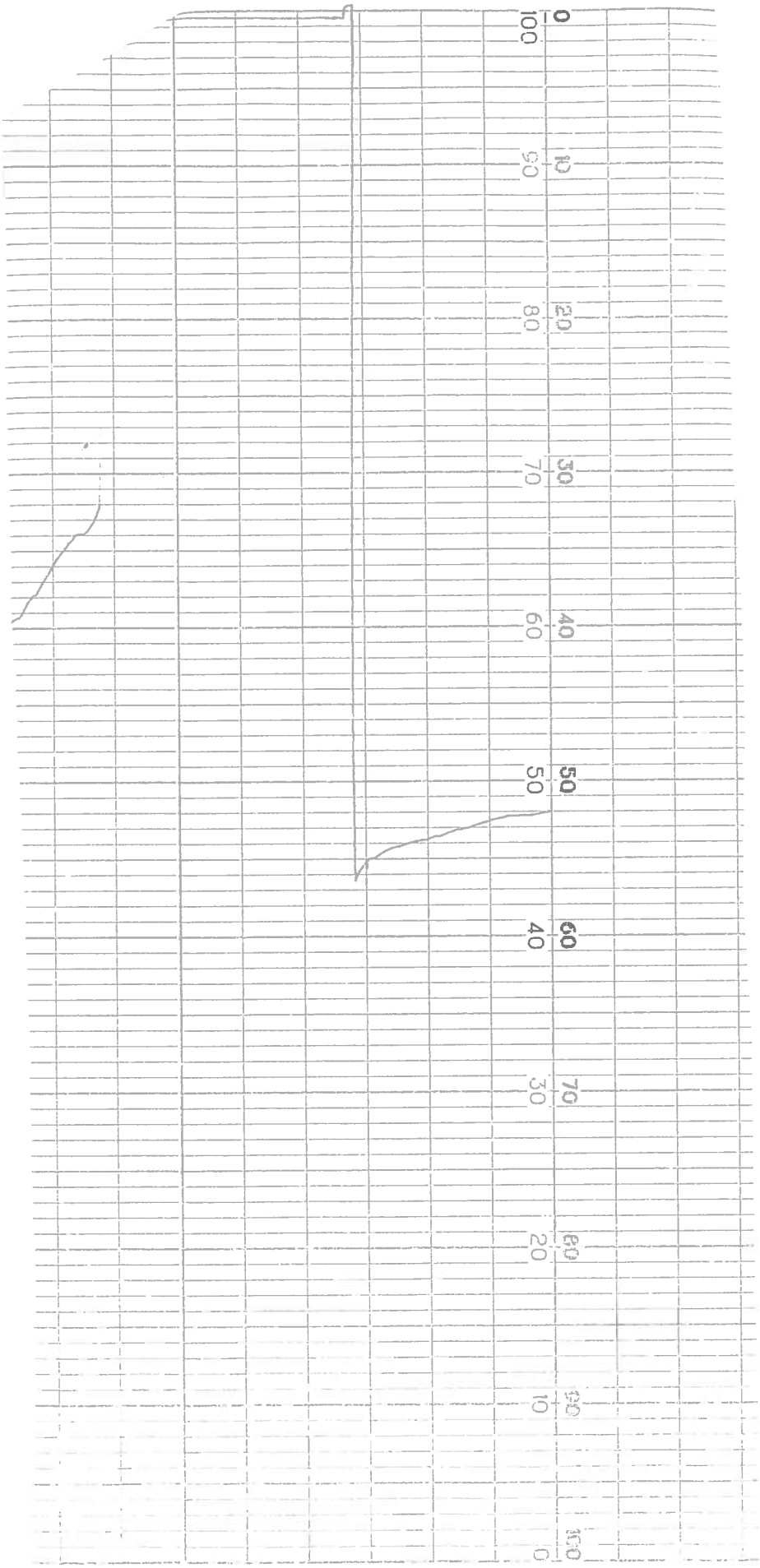

Iteration 00

Document No.: TE82950-IQR

Attachment: 7.11 Page: 2 of 2

82291

File Action Edit View Help

New

EQUIPMENT MASTER: 82291

Identifier: 82291

Component ID:

EQUIPMENT SUPPORT SCHEDULING HISTORY

Item:	23-WATERS MANUFACTURED E	Responsible Area:	TEST ENG
Description:	2487 DETECTOR	Watch Unit:	
Manufacturer:	WATERS CORP	Material Condition:	GOOD
Model:	2487	Size:	
Serial Number:	A02487 446M	User Field 5:	
Department:	WP07	User Field 6:	
Location:	Flow Splitter Test Station	User Field 7:	
Owned By:		Special Instructions:	
Category:			
Purchase Price:		Comments:	
Acquired Date:	22 Mar 2004		
Class:	Active		
Status Date:	22 Mar 2004	Standard:	Add As Standard...

Hevation 00

Document No.: TE82950-IQR

Attachment: 7.12 Page: 1 of 2

82291

File Action Edit View Help

New

EQUIPMENT MASTER: 82291

Identifier: 82291

Component ID:

EQUIPMENT SUPPORT SCHEDULING HISTORY

Add Event Add Similar Remove Event

Event Name	Event Type	Due Date
12 Month	Maintenance	31 Jan 2019

Event Type: Maintenance

Event Name: 12 Month

View Audit Trail ... Add History for this Event

DATES DETAILS SUPPORT MAINTENANCE

Due Date: 31 Jan 2019

Future Due Date: 31 Jan 2020

Last Action Date: 02 Jan 2018

Basis for Date Calculation: Date of Event

Interval: Month (End of Month)

Number: 12

Reminder Date:

Reminder Days:

Scheduled Person:

Work Flow Template:

Iteration 00

Document No.: TE82950-IQR

Attachment: 7.12 Page: 2 of 2

Appendix 2: Calibration/PM Record

Check all that apply: Calibration ☐ PM ☑

Date: 02JAN2018
Equipment I.D.: 82291
Due Date: 30DEC2017
Interval (Months) 12
Procedure: WAT030700 Rev. 02

Technician: Tom Chase
Description: 2487 Detector
Location: White Room
Next Due Date: ~~30JAN2018~~ 30JAN2019
TC 02JAN2018

Equipment Used:

Item	Serial Number/ID Number	Calibration or PM Date
TUV Final Test	TE82903-1	30OCT2017
Linearity Calibration Kit	WAT047691	N/A
Two Cuvette set	WAT047689	N/A
N/A	N/A	N/A

Calibration Results:

Procedure Step	Nominal (Include Tolerance)	As Found Result	As Left Result	Comments
		N/A		
		TC	05JAN2018	

Calibration Adjustment(s) Made? Yes ☐ No ☑

Note: If outside of the specified tolerances for calibration, send Out of Calibration Notice

Preventive Maintenance:

Procedure Step	Action(s) Taken
8-14	Performed test per TSP WAT030700 Rev. 02
	E.O.D
	TC 05JAN2018

Iteration 00
Document No.: TE82950-10R
Attachment: 7.13 Page: 1 of 2

Verification Results: Pass ☑ Fail ☐

Notes:

N/A
TC 05JAN2018

No field should be left blank; Insert "N/A" if Not Applicable

PREVENTIVE MAINTENANCE
ID 82291
BY TC DATE DEC 2016
DUE DEC 2017

TC 05JAN2018

Waters Corporation

INSTRUMENT FINAL TEST RECORD

Part Number:	WAT081110	Description:	Assy. Detector 2487
Tested By:	TC	Date:	1/2/2018 9:48 AM
Serial Number:	A02487446M	Control Number:	82291
Software Revision:	1.02	Factory Order:	N/A

1) Electrical Safety Ground Continuity			PASS☒	FAIL☐
2) Drift @ 254 nm (<= 100 µAU) - Actual:	-0.000099	AU	PASS☒	FAIL☐
3) Noise @ 254 nm (<= 7 µAU) - Actual:	0.000007	AU	PASS☒	FAIL☐
4) Dual Noise @ 254/280 nm (<= 50 µAU) - Actual:	0.000027	AU	PASS☒	FAIL☐
5) Erbium cuvette scan				
(255.00 +/- 1 nm) - Actual:	254.80	nm	PASS☒	FAIL☐
(378.80 +/- 1 nm) - Actual:	378.70	nm	PASS☒	FAIL☐
(522.40 +/- 1 nm) - Actual:	522.50	nm	PASS☒	FAIL☐
6) Linearity (<= 5.0% @ 2.5 AU) - Actual:	2.50	%RSD	PASS☒	FAIL☐

Instrument Result: PASS☑ FAIL☐ Signed: Tom Clark Date: 05 JAN 2018

Notes: N/A
TC 05 JAN2018

Iteration 00
Document No.: TE82950-1012
Attachment: 7.13 Page: 2 of 2

Drift Count: 17
Noise Count: 45
Dual Noise Count: 5

254 nm Energy [nA]: Sample Energy: 82.40778 Reference Energy: 110.71317

This Test Record and any data contained within it are proprietary to Waters Corporation and must be retained by Waters for the time period prescribed in its Quality Records Retention Policy. If any of the individual tests noted above fail; a note must be referenced that details the work performed to correct that specific deficiency. An overall failure indicates a special circumstance in which case a complete retest is to be done. A second form is required to document that testing; the initial form must be attached and retained

83011

File Action Edit View Help

New

EQUIPMENT MASTER: 83011

Identifier: 83011

Component ID:

EQUIPMENT SUPPORT SCHEDULING HISTORY

Item:	23-WATERS MANUFACTURED E	Responsible Area:	TEST ENG
Description:	DETECTOR	Watch Unit:	
Manufacturer:	WATERS	Material Condition:	
Model:	TUV	Size:	
Serial Number:	E03487784M	User Field 5:	
Department:	WP07	User Field 6:	
Location:	Flow Splitter Test Station	User Field 7:	
Owned By:		Special Instructions:	
Category:			
Purchase Price:		Comments:	
Acquired Date:	15 Oct 2007		
Class:	Active		
Status Date:	29 Oct 2007	Standard:	Add As Standard...

Iteration 00

Document No.: TE82958-10R

Attachment: 7.14 Page: 1 of 2

83011

File Action Edit View Help

New

EQUIPMENT MASTER: 83011

Identifier: 83011

Component ID:

EQUIPMENT SUPPORT SCHEDULING HISTORY

Add Event Add Similar Remove Event

Event Name	Event Type	Due Date
12 Month	Maintenance	31 Jan 2019

Event Type: Maintenance

Event Name: 12 Month

View Audit Trail ... Add History for this Event

DATES DETAILS SUPPORT MAINTENANCE

Due Date: 31 Jan 2019

Future Due Date: 31 Jan 2020

Last Action Date: 02 Jan 2018

Basis for Date Calculation: Date of Event

Interval: Month (End of Month)

Number: 12

Reminder Date:

Reminder Days:

Scheduled Person:

Work Flow Template:

Iteration 00

Document No.: TE82950-1QR

Attachment: 7.14 Page: 2 of 2

Waters
THE SCIENCE OF WHAT'S POSSIBLE.™

OPERATING PROCEDURE

Title: Operating Procedure, Calibration and Preventive Maintenance

Appendix 2: Calibration/PM Record

Check all that apply: Calibration ☐ PM ☑

Date: 02JAN2018
Technician: Tom Chase
Equipment. I.D.: 83011
Description: 2487 Detector
Due Date: 30DEC2017
Location: White Room
Interval (Months) 12
Next Due Date: 30JAN2019
Procedure: WAT030700 Rev. 02

Equipment Used:

Item	Serial Number/ID Number	Calibration or PM Date
TUV Final Test	TE82903-1	30OCT2017
Linearity Calibration Kit	WAT047691	N/A
Two Cuvette Set	WAT047689	N/A
N/A	N/A	N/A

Calibration Results:

Procedure Step	Nominal (Include Tolerance)	As Found Result	As Left Result	Comments
		N/A		
		TC 03JAN2018		

Calibration Adjustment(s) Made? Yes ☐ No ☑

Note: If outside of the specified tolerances for calibration, send Out of Calibration Notice

Preventive Maintenance:

Procedure Step	Action(s) Taken
8.14	Performed test per TSP WAT030700 Rev. 02
	EOD
	TC 03JAN2018

Iteration 00
Document No.: TE82950-10R
Attachment: 7.15 Page: 1 of 2

Verification Results: Pass ☑ Fail ☐

Notes:

N/A
TC 03JAN2018

No field should be left blank; Insert "N/A" if Not Applicable

PREVENTIVE MAINTENANCE
ID 83011
BY TC DATE DEC 2016
DUE DEC 2017

It is the responsibility of the user to verify they are using the current released version.
HARD COPY UNCONTROLLED UNLESS STAMPED SIGNED AND DATED BY AUTHORISED PERSONNEL

Effective from: 01/27/2017 thru: ... 730001799 QAX 000 06 RELEASE GENERAL

Waters Corporation

INSTRUMENT FINAL TEST RECORD

Part Number:	WAT081110	Description:	Assy. Detector 2487
Tested By:	TC	Date:	1/2/2018 9:51 AM
Serial Number:	E03487784M	Control Number:	83011
Software Revision:	1.02	Factory Order:	N/A

1) Electrical Safety Ground Continuity			PASS☒	FAIL☐
2) Drift @ 254 nm (<= 100 µAU) - Actual:	-0.000030	AU	PASS☒	FAIL☐
3) Noise @ 254 nm (<= 7 µAU) - Actual:	0.000004	AU	PASS☒	FAIL☐
4) Dual Noise @ 254/280 nm (<= 50 µAU) - Actual:	0.000008	AU	PASS☒	FAIL☐
5) Erbium cuvette scan				
(255.00 +/- 1 nm) - Actual:	254.80	nm	PASS☒	FAIL☐
(378.80 +/- 1 nm) - Actual:	378.50	nm	PASS☒	FAIL☐
(522.40 +/- 1 nm) - Actual:	522.40	nm	PASS☒	FAIL☐
6) Linearity (<= 5.0% @ 2.5 AU) - Actual:	1.94	%RSD	PASS☒	FAIL☐

Instrument Result: PASS☑ FAIL☐ Signed: Tom Case Date: 03 JAN / 2018

Notes: N/A
TC 03JAN2018

Iteration 00
Document No.: TE829500-1QR
Attachment: 7.15 Page: 2 of 2

Drift Count: 2
Noise Count: 28
Dual Noise Count: 1

254 nm Energy [nA]: Sample Energy: 91.93931 Reference Energy: 91.887154

This Test Record and any data contained within it are proprietary to Waters Corporation and must be retained by Waters for the time period prescribed in its Quality Records Retention Policy. If any of the individual tests noted above fail; a note must be referenced that details the work performed to correct that specific deficiency. An overall failure indicates a special circumstance in which case a complete retest is to be done. A second form is required to document that testing; the initial form must be attached and retained

83014

File Action Edit View Help

New

EQUIPMENT MASTER: 83014

Identifier: 83014

Component ID:

EQUIPMENT SUPPORT SCHEDULING HISTORY

Item:	23-WATERS MANUFACTURED E	Responsible Area:	TEST ENG
Description:	BINARY GRADIENT MODULE	Watch Unit:	
Manufacturer:	WATERS	Material Condition:	
Model:	BGM	Size:	
Serial Number:	F06APB003N	User Field 5:	
Department:	WP07	User Field 6:	
Location:	Flow Splitter Test Station	User Field 7:	
Owned By:		Special Instructions:	
Category:			
Purchase Price:		Comments:	
Acquired Date:	29 Oct 2007		
Class:	Active		
Status Date:	29 Oct 2007	Standard:	Add As Standard...

Iteration 00

Document No.: TE82958-IQR

Attachment: 7.16 Page: 1 of 2

83014

File Action Edit View Help

New

EQUIPMENT MASTER: 83014

Identifier: 83014

Component ID:

EQUIPMENT SUPPORT SCHEDULING HISTORY

Add Event Add Similar Remove Event

Event Name	Event Type	Due Date
12 Month	Maintenance	31 Jan 2019

Event Type: Maintenance

Event Name: 12 Month

View Audit Trail ... Add History for this Event

DATES DETAILS SUPPORT MAINTENANCE

Due Date: 31 Jan 2019

Future Due Date: 31 Jan 2020

Last Action Date: 02 Jan 2018

Basis for Date Calculation: Date of Event

Interval: Month (End of Month)

Number: 12

Reminder Date:

Reminder Days:

Scheduled Person:

Work Flow Template:

Iteration 00

Document No.: TE829SD-IRR

Attachment: 7.16 Page: 2 of 2

Appendix 2: Calibration/PM Record

Check all that apply: Calibration ☐ PM ☑

Date: 02 JAN 2018
Equipment. I.D.: 83014
Due Date: DEC 2017
Interval (Months) 12
Procedure: 730001799 Rev. 06

Technician: KEVIN SOUVANNASING
Description: BGM
Location: NPI-LEGACY
Next Due Date: JAN 2019

Equipment Used:

Item	Serial Number/ID Number	Calibration or PM Date
TE 82726 BGM FINAL TEST	TE82726	JULY 2018
NA KS 02JAN2017		

Calibration Results:

Procedure Step	Nominal (Include Tolerance)	As Found Result	As Left Result	Comments
NA KS	02 JAN 2017			

Calibration Adjustment(s) Made? Yes ☐ No ☑

Iteration 00
Document No.: TE82950-10R
Attachment: 7.17 Page: 1 of 2

Note: If outside of the specified tolerances for calibration, send Out of Calibration Notice

Preventive Maintenance:

Procedure Step	Action(s) Taken
735000099	REFERENCE TEST PROCEDURE FOR TESTING
27902545S	REFERENCE BUILD PROCEDURE FOR TUBE ASSEMBLY
NA KS 02JAN	2017

Verification Results: Pass ☑ Fail ☐

Notes: TEST EQUIPMENT WAS NOT IN USE DURING DECEMBER 30 - JAN 01, 2018
KS 02 JAN 2018

No field should be left blank; Insert "N/A" if Not Applicable

PREVENTIVE MAINTENANCE
ID 83014
BY DT DATE DEC 2016
DUE DEC 2017

PAGE 01 OF 01
KS 02 JAN 2018

Waters Corporation

INSTRUMENT FINAL TEST RECORD

Part Number:	279025450	Description:	2545 Binary Gradient Module
Tested By:	KEVIN SOUVANNASING	Date:	1/2/2018 8:05:50 AM
Serial Number:	F06APB003N	Control Number:	NA
Software Revision:	1.14	Factory Order:	0123456

Hi-Pot Ground Leakage	PASS ☒	FAIL ☐	see note # _____	PASS ☐	
Front Panel	PASS ☒	FAIL ☐	see note # _____	PASS ☐	
Rear Panel Test	PASS ☒	FAIL ☐	see note # _____	PASS ☐	
A Seal Wash Test	PASS ☒	FAIL ☐	see note # _____	PASS ☐	
B Seal Wash Test	PASS ☒	FAIL ☐	see note # _____	PASS ☐	
System Decay Test: from 5000 psi for 1 minute- limit(<= 100 psi) actual: 13 PSI	PASS ☒	FAIL ☐	see note # _____	PASS ☐	

Pump Leak Tests: from 5000 Psi between 1.0 and 1.5 minutes-limits(<200 psi leak rate @ <.2ml(20%) compressed volume)

A right leakrate - actual:	44.1 psi/min	A right comp. vol. - actual:	0.066 mL (5.5 % of stroke)	PASS ☒	FAIL ☐	see note # _____	PASS ☐
A left leakrate - actual:	40.9 psi/min	A left comp. vol. - actual:	0.064 mL (5.3 % of stroke)	PASS ☒	FAIL ☐	see note # _____	PASS ☐
B right leakrate - actual:	72.7 psi/min	B right comp. vol. - actual:	0.064 mL (5.4 % of stroke)	PASS ☒	FAIL ☐	see note # _____	PASS ☐
B left leakrate - actual:	26.3 psi/min	B left comp. vol. - actual:	0.068 mL (5.6 % of stroke)	PASS ☒	FAIL ☐	see note # _____	PASS ☐

Pump A Flow Tests: flow rate measured for 1.0 minute(except 1ml for 5 min.) @ ~ 600 psi-limit(<= 1 % @ specified flow rate)

A 1 ml/min flowrate - actual:	4.98	milliliters	flow accuracy:	-0.40	% error	PASS ☒	FAIL ☐	see note # _____	PASS ☐
A 20 ml/min flowrate - actual:	19.95	milliliters	flow accuracy:	-0.25	% error	PASS ☒	FAIL ☐	see note # _____	PASS ☐
A 75 ml/min flowrate - actual:	75.08	milliliters	flow accuracy:	0.11	% error	PASS ☒	FAIL ☐	see note # _____	PASS ☐
A 150 ml/min flowrate - actual:	148.69	milliliters	flow accuracy:	-0.87	% error	PASS ☒	FAIL ☐	see note # _____	PASS ☐

Pump B Flow Tests: flowrates measured for 1.0 minute(except 1ml for 5 min.) @ ~ 600 psi-limit(<= 1 % @ specified flow rate)

B 1 ml/min flowrate - actual:	5.00	milliliters	flow accuracy:	0.00	% error	PASS ☒	FAIL ☐	see note # _____	PASS ☐
B 20 ml/min flowrate - actual:	19.95	milliliters	flow accuracy:	-0.25	% error	PASS ☒	FAIL ☐	see note # _____	PASS ☐
B 75 ml/min flowrate - actual:	75.13	milliliters	flow accuracy:	0.17	% error	PASS ☒	FAIL ☐	see note # _____	PASS ☐
B 150 ml/min flowrate - actual:	148.92	milliliters	flow accuracy:	-0.72	% error	PASS ☒	FAIL ☐	see note # _____	PASS ☐

Instruments Result: PASS ☒ FAIL ☐ Operator: Kevin Souvannasing Date: 02 JAN 2018

Notes:
NA
KS 02 JAN 2018

Iteration 00
Document No.: TE82950-10R
Attachment: 7.17 Page: 2 of 2

A Ripple @ 1ml:	0.0	%	B Ripple @ 1ml:	0.0	%
A Ripple @ 20ml:	0.0	%	B Ripple @ 20ml:	0.0	%
A Ripple @ 75ml:	16.5	%	B Ripple @ 75ml:	16.5	%
A Ripple @ 150ml:	0.7	%	B Ripple @ 150ml:	1.6	%

EOD [illegible] 02 JAN 2018

This Test Record and any data contained within it are proprietary to Waters Corporation and must be retained by Waters for the time period prescribed in its Quality Records Retention Policy. If any of the individual tests noted above fail; a note must be referenced that details the work performed to correct that specific deficiency. An overall failure indicates a special circumstance in which case a complete retest is to be done. A second form is required to document that testing; the initial form must be attached and retained.

ESSCO CALIBRATION LABORATORY

DIVISION OF WALSH ENGINEERING SERVICES, INC.

CALIBRATION/REPAIR OF ALL TYPES OF ELECTRONIC / MECHANICAL TEST EQUIPMENT
27 INDUSTRIAL AVE, CHELMSFORD, MA 01824-3618
TEL: (800) 325-2201 (978) 250-0880 www.esscolab.com

NVLAP CALIBRATION
NVLAP LAB CODE 200972-0

CERTIFICATE OF CALIBRATION

ISSUE DATE: 04/25/2017 **Certificate #: 1491906**

CUSTOMER / LOCATION
WATERS CORPORATION - 5 @
34 MAPLE STREET
DEPT TE
MILFORD, MA 01757
DEPT: WP07
PURCHASE ORDER:

EQUIPMENT INFORMATION
MANUFACTURER:BBC
MODEL NO:SE120
SERIAL NO:8453385
CONTROL NO:TR280
TYPE: ANALOG CHART RECORDER

AS FOUND	**IN TOLERANCE**
AS LEFT	**IN TOLERANCE**

Remarks:
ON SITE

METHOD / ENVIRONMENT

PERFORMED: ON SITE
METHOD: BBC SE120
TEMPERATURE (deg C): 23
REL HUMIDITY (%RH): 28

CALIBRATION

CALIBRATION DATE:25/Apr/2017
METROLOGIST:
CALIBRATION DUE: 30/Apr/2018

Standards Used To Calibrate Equipment

I.D.	Template	Type Equipment	Report No.	Last Cal. Date	Cal. Due Date
E1501	@ FLUKE 5500A-SC600 OPT	CALIBRATOR	1475787	03/27/2017	03/27/2018

Document No.: TE829SOP-10R Iteration 00
Attachment: 7.18 Page: 1 of 3

The ESSCO Quality System is accredited to ISO 17025:2005

The results above relate only to the item(s) calibrated. Expanded uncertainties were calculated per ISO "Guide to the Expression of Uncertainty Measurement", (GUM) with 95% confidence level and a coverage factor of k =2. This certificate shall not be reproduced, except in full, without written approval of ESSCO. The user should consider the measurement uncertainty when assessing the metrological status of the equipment.

This document certifies that the unit conformed to applicable specifications upon successful completion of the calibration. Any number of factors may cause the calibration item to drift out of calibration before the recommended interval has expired. The standards used are traceable to NIST or a National Measurement Institute.

This calibration was performed in compliance with the ESSCO Quality System manual, ECL1 Rev 36, dtd 16 Dec 2015, ISO/IEC 17025:2005, ISO 9001:2008, ANSI/NCSL Z540-1 part 1, ISO 10012:2003, ISO 13485, TS 16949, and when required contractually, 10CFR21 and 10CFR50 App. B.

This report must not be used to claim product certification, approval, or endorsement by NVLAP, NIST, or any agency of the Federal Government. **This report contains data that are not covered by the NVLAP accreditation**

Releasing Authority

Test Points

Seq.	Description	Nominal	Tolerance	Unit Measure	As Found	As Left	Uncertainty
1	CH1 1 mV RANGE	1.000	1.005 0.995	mV	1.000	1.000	0.00059 mV
2	CH1 2 mV RANGE	2.000	2.010 1.990	mV	2.000	2.000	0.00059 mV
3	CH1 5 mV RANGE	5.000	5.025 4.975	mV	5.000	5.000	0.00059 mV
4	CH1 10 mV RANGE	10.00	10.05 9.95	mV	10.00	10.00	0.0059 mV
5	CH1 20 mV RANGE	20.00	20.10 19.90	mV	19.99	19.99	0.0059 mV
6	CH1 50 mV RANGE	50.00	50.25 49.75	mV	49.99	49.99	0.0059 mV
7	CH1 100 mV RANGE	100.0	100.5 99.5	mV	99.8	99.8	0.059 mV
8	CH1 200 mV RANGE	200.0	201.0 199.0	mV	199.6	199.6	0.059 mV
9	CH1 500 mV RANGE	500.0	502.5 497.5	mV	499.7	499.7	0.059 mV
10	CH1 1 V RANGE	1.000	1.005 0.995	V	1.000	1.000	0.00059 V
11	CH1 2 V RANGE	2.000	2.010 1.990	V	2.000	2.000	0.00059 V
12	CH1 5 V RANGE	5.000	5.025 4.975	V	5.000	5.000	0.00059 V
13	CH1 10 V RANGE	10.00	10.05 9.95	V	10.00	10.00	0.0059 V
14	CH1 20 V RANGE	20.00	20.10 19.90	V	20.00	20.00	0.0059 V
15	CH1 50 V RANGE	50.00	50.25 49.75	V	50.00	50.00	0.0059 V
16	CH1 100 V RANGE	100.0	100.5 99.5	V	100.0	100.0	0.059 V
17	CH1 200 V RANGE	200.0	201.0 199.0	V	200.0	200.0	0.0059 V

Iteration 00
Document No.: TE8296a-108
Attachment: 7.18 Page: 2 of 3

Test Points

Seq.	Description	Nominal	Tolerance	Unit Measure	As Found	As Left	Uncertainty
18	CH1 500 V RANGE	250.0	251.3 248.7	V	250.0	250.0	0.0059 V
19	CH2 1 mV RANGE	1.000	1.005 0.995	mV	1.000	1.000	0.00059 mV
20	CH2 2 mV RANGE	2.000	2.010 1.990	mV	2.000	2.000	0.00059 mV
21	CH2 5 mV RANGE	5.000	5.025 4.975	mV	5.000	5.000	0.00059 mV
22	CH2 10 mV RANGE	10.00	10.05 9.95	mV	10.00	10.00	0.0059 mV
23	CH2 20 mV RANGE	20.00	20.10 19.90	mV	20.00	20.00	0.0059 mV
24	CH2 50 mV RANGE	50.00	50.25 49.75	mV	50.00	50.00	0.0059 mV
25	CH2 100 mV RANGE	100.0	100.5 99.5	mV	100.0	100.0	0.059 mV
26	CH2 200 mV RANGE	200.0	201.0 199.0	mV	200.0	200.0	0.059 mV
27	CH2 500 mV RANGE	500.0	502.5 497.5	mV	500.0	500.0	0.059 mV
28	CH2 1 V RANGE	1.000	1.005 0.995	V	1.000	1.000	0.00059 V
29	CH2 2 V RANGE	2.000	2.010 1.990	V	2.000	2.000	0.00059 V
30	CH2 5 V RANGE	5.000	5.025 4.975	V	5.000	5.000	0.00059 V
31	CH2 10 V RANGE	10.00	10.05 9.95	V	10.00	10.00	0.0059 V
32	CH2 20 V RANGE	20.00	20.10 19.90	V	20.00	20.00	0.0059 V
33	CH2 50 V RANGE	50.00	50.25 49.75	V	50.00	50.00	0.0059 V
34	CH2 100 V RANGE	100.0	100.5 99.5	V	100.0	100.0	0.059 V
35	CH2 200 V RANGE	200.0	201.0 199.0	V	200.0	200.0	0.059 V
36	CH2 500 V RANGE	250.0	251.3 248.7	V	250.0	250.0	0.059 V
37	CHART SPEED			CHECK	PASS	PASS	N/A

Document No.: TE82679B-10R
Attachment: 7.18 Page: 3 of 3
Iteration 00

End of Data

Note: A = Adjusted F = Failed L = Limited ** = Outside Scope of Accreditation

IOQ Test name: General Safety and Alarms	**Test Script No.:** IQ-05
Equipment No./ID: TE829500	**Equipment Name:** Flow Splitter Tester
Installation Site: NPI: Milford, MA	

Purpose:
To verify that the test equipment can operate in a safe manner, within its designated location.

Test execution:
List any additional safety related conditions or alarms in the Safety Inspection column. List the associated safety requirement/specification in the Acceptance Criteria column. Perform an inspection/test of the equipment to assess its safety related conditions. Enter N/A for any parameter or cell that is not used or applicable.

Objective evidence:
Completed Test Script Data Sheet

Photo of the secured glass bottles and/or tanks, if applicable

Safety Inspection	Acceptance criteria	Pass/Fail	Initial & Date
Mechanical Safety/ Pinch Points/Sharp Edges	None Found	Pass	EEP 06 Dec 2017
Electrical Safety Hi Pot/Ground Continuity	Passed per test specification WAT046538	Pass	EEP 06 Dec 2017
Glass Bottles are secure	Secure	Pass	EEP 06 Dec 2017
Tanks are secure	Secure	Pass	EEP 06 Dec 2017
	N/A EEP 08 Jun 2018		

Comments:

Electrical safety tests performed with Asset # 90261 (calibrated 12 Jun 2017)
EEP 06 Dec 2017

Overall Test Conclusion: ☒ **Pass** ☐ **Fail**

Iteration 00

Copy this Test Script as needed

Document No.: TE829500-IQR

Attachment: 7.19 Page: 1 of 1

ESSCO CALIBRATION LABORATORY

DIVISION OF WALSH ENGINEERING SERVICES, INC.

CALIBRATION/REPAIR OF ALL TYPES OF ELECTRONIC / MECHANICAL TEST EQUIPMENT
27 INDUSTRIAL AVE, CHELMSFORD, MA 01824-3618
TEL: (800) 325-2201 (978) 250-0880 www.esscolab.com

CALIBRATION
NVLAP LAB CODE 200972-0

CERTIFICATE OF CALIBRATION

ISSUE DATE: 06/12/2017 **Certificate #: 1515495**

CUSTOMER / LOCATION
WATERS CORPORATION - 5 @
34 MAPLE STREET
DEPT TE
MILFORD, MA 01757

DEPT: WP72
PURCHASE ORDER: ECL#6/8/2017

EQUIPMENT INFORMATION
MANUFACTURER:QUADTECH
MODEL NO:GUARDIAN6000
SERIAL NO:1140659
CONTROL NO:90261
TYPE: HIPOT, SAFETY ANALYZER

AS FOUND	**IN TOLERANCE**
AS LEFT	**IN TOLERANCE**

Remarks:
IN LAB

METHOD / ENVIRONMENT

PERFORMED: IN LAB
METHOD:QUADTECH GUARD 6000
TEMPERATURE (deg C): 24
REL HUMIDITY (%RH): 52

CALIBRATION

CALIBRATION DATE: 12/Jun/2017
METROLOGIST:
CALIBRATION DUE: 30/Jun/2018

Standards Used To Calibrate Equipment

I.D.	Template	Type Equipment	Report No.	Last Cal. Date	Cal. Due Date
E1370	@ CLAROSTAT 240C	POWER RESISTOR	1359979	07/11/2016	07/11/2017
E1801	@ IET VRS100-10-1K	HI-RESISTANCE STANDARD	1420217	11/18/2016	11/18/2017
E1839	@ FLUKE 87	DMM	1434101	12/22/2016	12/22/2017
E231	@ RUBICON 0.1 OHM	STD. RESISTOR	1356768	06/29/2016	06/29/2017
E3046	@ VITREK 4700	PRECISION HV METER	1420427	11/11/2016	11/10/2017

Attachment: 7.20 Page: 1 of 2
Document No.: TE82958-102
Iteration 00

The ESSCO Quality System is accredited to ISO 17025:2005

The results above relate only to the item(s) calibrated. Expanded uncertainties were calculated per ISO "Guide to the Expression of Uncertainty Measurement". (GUM) with 95% confidence level and a coverage factor of k=2. This certificate shall not be reproduced, except in full, without written approval of ESSCO. The user should consider the measurement uncertainty when assessing the metrological status of the equipment.

This document certifies that the unit conformed to applicable specifications upon successful completion of the calibration. Any number of factors may cause the calibration item to drift out of calibration before the recommended interval has expired. The standards used are traceable to NIST or a National Measurement Institute.

This calibration was performed in compliance with the ESSCO Quality System manual, ECL1 Rev 36, dtd 16 Dec 2015, ISO/IEC 17025:2005, ISO 9001:2008, ANSI/NCSL Z540-1 part 1, ISO 10012:2003, ISO 13485, TS 16949, and when required contractually, 10CFR21 and 10CFR50 App. B.

This report must not be used to claim product certification, approval, or endorsement by NVLAP, NIST, or any agency of the Federal Government.

BRIAN RONDEAU
Releasing Authority

Internal Use Only: 06/08/2017 6/16/2017 DATA EOM WAT100 ESSCO VAN 16 178194

Test Points

Seq.	Description	Nominal	Tolerance	Unit Measure	As Found	As Left	Uncertainty
1	ACV	1000.0	1015.0 985.0	V	996.8	996.8	±3.5 V
2	ACV	3000.0	3035.0 2965.0	V	2993.1	2993.1	±4.6 V
3	ACV	5000.0	5055.0 4945.0	V	4998.6	4998.6	±7.9 V
4	DCV	1000.0	1015.0 985.0	V	1000.7	1000.7	±0.058 V
5	DCV	3000.0	3035.0 2965.0	V	3002.3	3002.3	± 22.5 V
6	DCV	6000.0	6065.0 5935.0	V	6012.1	6012.1	± 45.0 V
7	ACA	30.00	30.35 29.65	mA	30.25	30.25	±0.065 mA
8	DCA	15.00	15.20 14.80	mA	14.98	14.98	±0.0098 mA
9	IR VOLTAGE	1000.0	1015.0 985.0	V	1001.3	1001.3	±0.058 V
10	IR RESIST	100.0	105.0 95.0	MOhms	102.7	102.7	±0.058 MOhms
11	IR RESIST	1000.0	1050.0 950.0	MOhms	1005.0	1005.0	±0.58 MOhms
12	GR RESIST	100.0	101.3 98.7	mOhms	99.5	99.5	±0.058 mOhms
13	GR CURRENT	10.00	10.40 9.60	Amp	9.97	9.97	±0.0075 A

End of Data

Note: A = Adjusted F = Failed L = Limited

Iteration 00
Document No.: TE82958-10R
Attachment: 7.2B Page: 2 of 2

IOQ Test name: Functional Verification	**Test Script No.:** IQ-06
Equipment No./ID: TE82950	**Equipment Name:** Flow Splitter Tester
Installation Site: NPI: Milford, MA	

Purpose:

To verify that system transfer and/or qualification activities have not adversely affected system functionality.

Test execution:

One UUT shall be tested to verify that the test equipment functions as expected. If the system creates and/or tests more than one part number, the UUT to be tested per this Script should be a "worst case" product, and defined within the associated Installation Qualification Report. Enter N/A for any parameter or cell that is not used or applicable.

Objective evidence:

Completed Test Script Data Sheet

Copy of the system Test Record for the UUT, if applicable.

UUT Part Number/Serial Number	Acceptance criteria	Pass/Fail	Initial & Date
UUT Part Number: 2790001309 UUT Serial Number: 05007014	All required CTQ Specification measurements result in a Pass.	Pass	EEP 08 Jan 2018

Comments:

N/A EEP 08 Jan 2018

Overall Test Conclusion: ☒ Pass ☐ Fail

Copy this Test Script as needed

Iteration 00

Document No.: TE82950-IQR

Attachment: 7.21 Page: 1 of 1

Page 1 of 1 BF 08 Jan 2018

WATERS CORPORATION

FLOW SPLITTER FINAL TEST RECORD

Part Number: 279001309	Description: Flow Splitter, 0.5 to 2 ml/min, 15:1
Tested By: Bonnie Fleury	Date: 08 / Jan / 2018
Serial Number: 0507014	Control Number: N/A
Software Revision: N/A	Factory Order: N/A

Backpressure @ Max Flow PASS ☑ FAIL ☐ see note #_____ PASS ☐
Spec: < 450 PSI Actual: 418

Pressure Decay (1,000 PSI Test) PASS ☑ FAIL ☐ see note #_____ PASS ☐
Spec: < 60 PSI/Min Actual: 22

Delay Time @ Max Flow PASS ☑ FAIL ☐ see note #_____ PASS ☐
Spec: 0.060 ≤ Std Dev. ≤ 0.16
(See Empower Report)

Instrument Result: PASS ☑ FAIL ☐ Signed [signature] Date: 08 / Jan / 2018

Event	Resolution	NCR #
N/A	BF 08 Jan 2018	

Iteration 00
Document No.: TE82950-10R
Attachment: 7.22 Page: 1 of 2

Note: Fill in 'N/A' if not applicable.

This Test Record and any data contained within it are proprietary to Waters Corporation and must be retained by Waters for the time period prescribed in its Quality Records Retention Policy. If any of the individual tests noted above fail, a note must be referenced that details the work performed to correct that specific deficiency. An overall failure indicates a special circumstance in which case a complete retest is to be done. A second form is required to document that testing. The initial form must be attached and retained.

page 1 of 1 08 Jan 2018

Part Number: 279001309
Tested By: BONNIE FLEURY
Serial Number: 0507014

Description: Splitter, 0.5-2 ml/min, 15:1 split
Date: 1/8/2018
Sample Set: 0p5 to 2_15 to 1 split
Factory Order: N/A

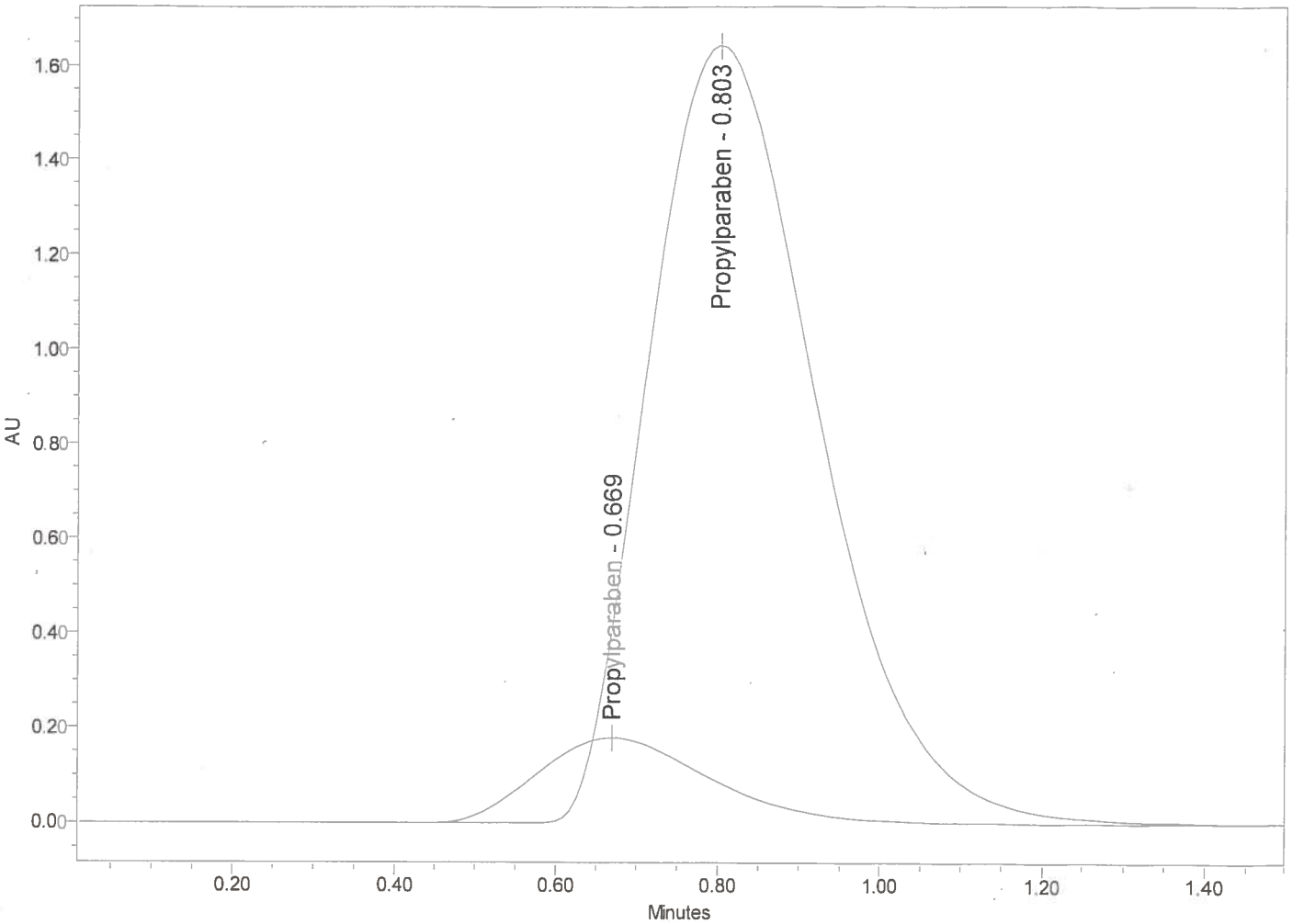

Component Summary For Retention Time

	Date Acquired	Propylparaben
1	1/8/2018 9:39:32 AM EST	0.66943
2	1/8/2018 9:39:32 AM EST	0.80251
Std. Dev.		0.0941

Component Summary For Height

	SampleName	Propylparaben (µV)
1	0.5-2 ml/min, 15:1 split	177797
2	0.5-2 ml/min, 15:1 split	1644806
Min		177797

Iteration 00
Document No.: TE82950-10R
Attachment: 7.22 Page: 2 of 2

Specifications:
0.060 <= RT Std Dev. <= 0.160
Analytical (Min) Height > 170,000

This Test Record and any data contained within it are proprietary to Waters Corporation and must be retained by Waters for the time period prescibed in its Quality Records Retention Policy. If any of the individual tests fail; a note must be referenced that details the work performed to correct that specific deficiency. An overall failure indicates a special circumstance in which case a complete retest is to be done. A second form is required to document that testing; the initial form must be attached and retained.

IOQ Test name: Functional Verification	**Test Script No.:** IQ-06
Equipment No./ID: TE82950	**Equipment Name:** Flow Splitter Tester
Installation Site: NPI: Milford, MA	

Purpose:

To verify that system transfer and/or qualification activities have not adversely affected system functionality.

Test execution:

One UUT shall be tested to verify that the test equipment functions as expected. If the system creates and/or tests more than one part number, the UUT to be tested per this Script should be a "worst case" product, and defined within the associated Installation Qualification Report. Enter N/A for any parameter or cell that is not used or applicable.

Objective evidence:

Completed Test Script Data Sheet

Copy of the system Test Record for the UUT, if applicable.

UUT Part Number/Serial Number	Acceptance criteria	Pass/Fail	Initial & Date
UUT Part Number: 279001313 UUT Serial Number: 04133169	All required CTQ Specification measurements result in a Pass.	Pass	EEP 08 Jan 2018

Comments:

N/A EEP 08 Jan 2018

Overall Test Conclusion: ☒ Pass ☐ Fail

Copy this Test Script as needed

Iteration 00
Document No.: TE82950-10R
Attachment: 7.23 Page: 1 of 1

page 1 of 1 BF 08 Jan 2018

WATERS CORPORATION
FLOW SPLITTER FINAL TEST RECORD

Part Number: 279001313
Description: Flow Splitter, 30-100 ml/min, 5K:1
Tested By: Bonnie Fleury
Date: 08 Jan 2018
Serial Number: 0413369
Control Number: N/A
Software Revision: N/A
Factory Order: N/A

Backpressure @ Max Flow PASS ☑ FAIL ☐ see note #_____ PASS ☐
Spec: < 750 PSI Actual: 693

Pressure Decay (1,000 PSI Test) PASS ☑ FAIL ☐ see note #_____ PASS ☐
Spec: < 60 PSI/Min Actual: 22

Delay Time @ Max Flow PASS ☑ FAIL ☐ see note #_____ PASS ☐
Spec: 0.060 ≤ Std Dev. ≤ 0.11
(See Empower Report))

Instrument Result: PASS ☑ FAIL ☐ Signed [signature] Date: 08 Jan 2018

Event	Resolution	NCR #
N/A BF 08 Jan 2018		

Iteration 00
Document No.: TE82958-WR
Attachment: 7.24 Page: 1 of 2

Note: Fill in 'N/A' if not applicable.

This Test Record and any data contained within it are proprietary to Waters Corporation and must be retained by Waters for the time period prescribed in its Quality Records Retention Policy. If any of the individual tests noted above fail, a note must be referenced that details the work performed to correct that specific deficiency. An overall failure indicates a special circumstance in which case a complete retest is to be done. A second form is required to document that testing. The initial form must be attached and retained.

page 1 of 1 DF 08JAN2018

rt Number: 279001313
Tested By: BONNIE FLEURY
Serial Number: 0413369

Description: Splitter, 30-100 ml/min, 5,000:1
Date: 1/8/2018
Sample Set: 30 to 100_5000 to 1 split
Factory Order: N/A

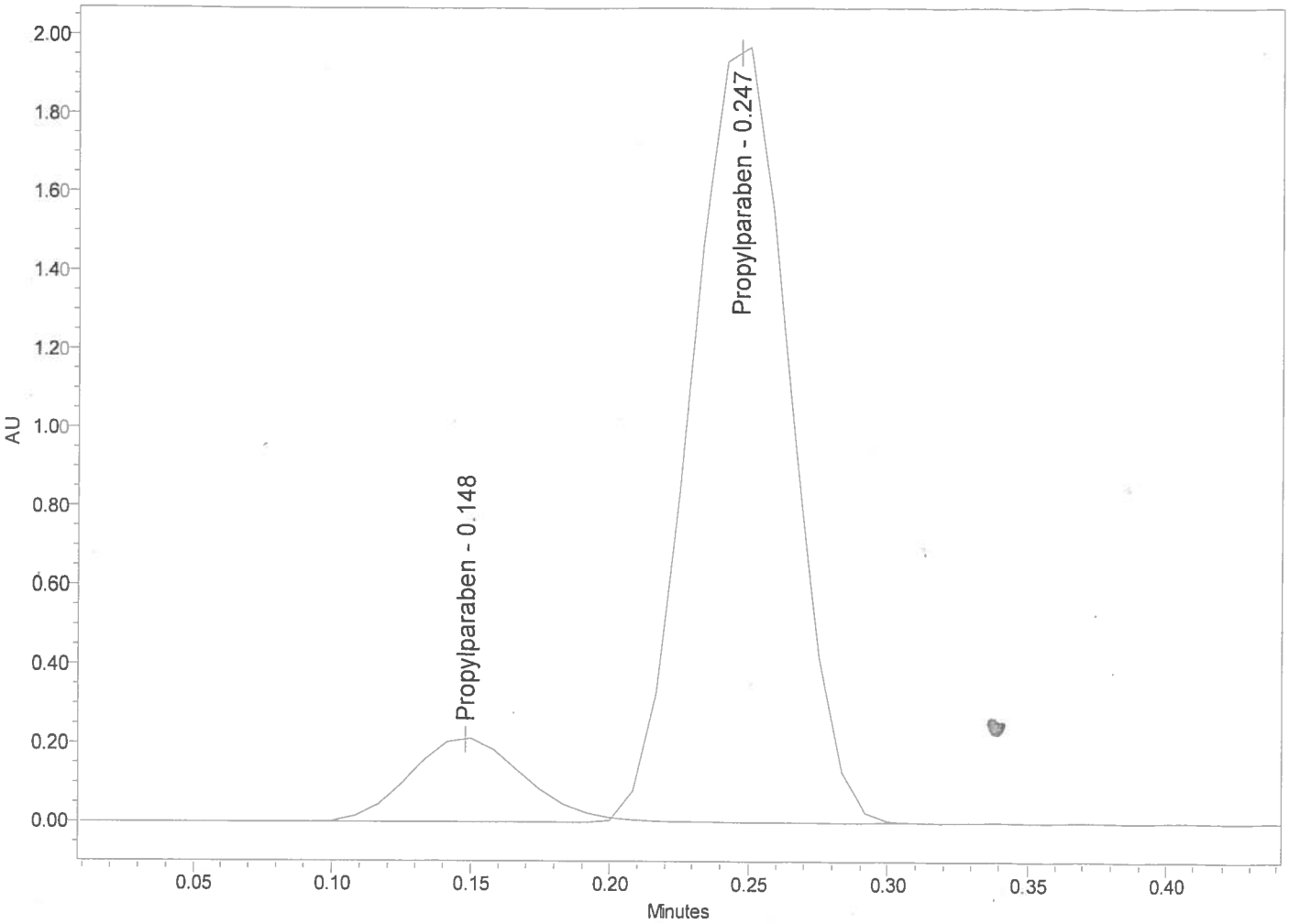

Component Summary For Retention Time

	Date Acquired	Propylparaben
1	1/8/2018 8:30:20 AM EST	0.14810
2	1/8/2018 8:30:20 AM EST	0.24684
Std. Dev.		0.0698

Component Summary For Height

	SampleName	Propylparaben (µV)
1	30-100 ml/min, 5,000:1 split	210805
2	30-100 ml/min, 5,000:1 split	1974829
Min		210805

Iteration 00
Document No.: TE82950-108
Attachment: 7.24 Page: 2 of 2

Specifications:
0.060 <= RT Std Dev. <= 0.110
Analytical (Min) Height > 125,000

This Test Record and any data contained within it are proprietary to Waters Corporation and must be retained by Waters for the time period prescibed in its Quality Records Retention Policy. If any of the individual tests fail; a note must be referenced that details the work performed to correct that specific deficiency. An overall failure indicates a special circumstance in which case a complete retest is to be done. A second form is required to document that testing; the initial form must be attached and retained.